SERVICE MANUAL SD530/SD630

marantz®

model SD530/SD630

Auto Revers Cassette Deck

MARANTZ DESIGN AND SERVICE

Using superior design and selected high grade components, MARANTZ company has created the ultimate in stereo sound. Only **original MARANTZ parts** can insure that your MARANTZ product will continue to perform to the specifications for which it is famous.

Parts for your MARANTZ equipment are generally available to our National Marantz Subsidiary or Agent.

ORDERING PARTS:

Parts can be ordered either by mail or by telex. In both cases, MARANTZ part number has to be specified. If you order by mail, fulfil MARANTZ order forms.

MARANTZ S.A.
EUROPEAN PARTS DEPARTMENT
2, Avenue Léopold III
B-7120 PERONNES-lez-BINCHE
BELGIUM
TWX: 57589 SEPLT B

SUPERSCOPE NATIONAL PARTS DEPARTMENT
20525 Nordhoff Street
Chatsworth, California 91311
Phone: 1-800-423-5108
Phone: 1-213-998-9333

The following information must be supplied to eliminate delays in processing your order:

1. Complete address
2. Complete part numbers and quantities required
3. Description of parts
4. Model number for which part is required
5. Way of shipment
6. Signature: any order form or telex must be signed otherwise such part order will be considered as null and void.

PARTS ORDERING:

Parts may be ordered from the following addresses:

EUROPE

MARANTZ S.A.
European Parts Department
2, Avenue Léopold III
B-7120 Péronnes-lez-Binche
Belgium
Telex: 57589

MARANTZ GERMANY GMBH
Max Planckstrasse, 22
6072 DREIEICH 1
West Germany
Telex: 4185316

MARANTZ FRANCE
4 Rue Bernard Palissy
92600 Asnières
France
Telex: 611651

MARANTZ DENMARK
Bregnerødvej 132b
3460 Birkerød
Denmark
Telex: 39137

MARANTZ GMBH AUSTRIA
Wiedner Hauptstrasse 98
1050 Wien
Austria
Telex: 113583

MARANTZ S.A.
326 Avenue Louise Bte 32
1050 Brussels
Belgium
Telex: 26602

MARANTZ NORSKE A.S.
Refstadalleen 13
Oslo 5
Norway
Telex: 19659

MARANTZ AUDIO U.K. LTD.
Unit 15/16
Saxon Way Industrial Estate
Moor Lane
Harmondsworth UB7 OLW
Great Britain
Telex: 935196

MARANTZ BELGIUM
45 Rue Auguste Van Zande
1080 Brussels
Belgium

MARANTZ SVENSKA A.B.
Svartviksvangen 56
Traneberg - Box 12016
16112 Bromma
Sweden
Telex: 13449

AUSTRALIA

MARANTZ AUSTRALIA PTY., LTD.
32 Cross Street
Brookvale, N.S.W. 2100
Australia
Telex: 24121

U.S.A.

MARANTZ COMPANY, INC.
National Service Dept.
P.O. Box 577
Chatsworth, CA 91311
U.S.A.
Telex: 4720284

CANADA

SUPERSCOPE CANADA, LTD.
3710 Nashua Drive
Mississauga
Ontario, Canada L4V1M5

JAPAN

MARANTZ JAPAN, INC.
35-1, 7-chome, Sagamiono
Sagamihara-shi, Kanagawa
Japan
Telex: 22878

All of the above locations are fully equipped to take care of your total service needs. Because various countries have differing configuration requirements, it is necessary that you contact the service facility in your particular country. In the event that there is no service location listed for your country, please, contact the nearest facility for the necessary assistance.

> In case of difficulties, do not hesitate to contact the Technical Department at abovementioned address.

NOTE–FOR U.S.A. ONLY

Parts for your MARANTZ stereo are generally available within 72 hours throughout the nation via a toll-free line to our National Parts Depot in California. The sales professionals who take your call immediately refer to their own desk top computer terminal and can quickly determine the availability and price information you require. If, for some reason, your order should exceed our available stock, we usually can instantly provide an alternate replacement part or current delivery information. When the order is placed and confirmed, the computer simultaneously generates "hard copy" orders at the distribution center. As hard copies come directly from the computer to the national parts depot, your requested stock is assembled and prepared for shipment and placed on the first available carrier for delivery to you.

Phone orders will eliminate mail delays, and we encourage the use of this method. If you order by mail, use MARANTZ parts order forms which are available from SUPERSCOPE NATIONAL PARTS DEPARTMENT.

marantz®

TABLE OF CONTENTS

Section	Title	Page
INTRODUCTION		1
1.	SHOCK, FIRE HAZARD SERVICE TEST:	1
2.	P.W. BOARDS	1
3.	TEST EQUIPMENT REQUIRED FOR SERVICING	2
4.	DESCRIPTIONS OF MECHANISM AND CIRCUIT	2
4.1	Record/Play Signal System IC (HA 12051) for Deck System	2
4.2	Dolby IC HA12038NT	3
4.3	Skip Operation	3
4.4	dbx Disk	4
4.5	Photo Sensor Circuit	6
5.	CIRCUIT OPERATION (μ-COM AND PERIPHERAL CIRCUITS)	7
5.1	Initial Check	7
5.2	Motor Drive Circuit	8
5.3	Operation	9
6.	DISASSEMBLY	10
6.1	Removing the Top Cover	10
6.2	Removing the Front Panel	10
6.3	Removing the Mechanism	10
6.4	Removing the P.W. Board	10
7.	OPERATIONAL DESCRIPTION OF AUTO REVERSE MECHANISM	11
7.1	Head Chassis Control and Head Rotation	11
7.2	Head Rotation in Reverse Mode	11
7.3	Notes on Replacing F/R Arm Assembly and F/R Motor	12
7.4	Play Take-Up Torque	12
8.	ELECTRICAL ADJUSTMENTS	12
8.1	Head Azimuth Adjustment and Playback Equalizer Adjustment	13
8.2	Tape Speed Adjustment and Measurement	13
8.3	Wow and Flutter Measurement	14
8.4	Playback Output Level Adjustment	14
8.5	Playback Output Level Adjustment (dbx)	14
8.6	Peak Level Meter Adjustment	14
8.7	Playback Noise Measurement	15
8.8	Mpx Filter Measurement	15
8.9	Record/Playback Frequency Response Adjustment and Measurement (Normal)	16
8.10	Record/Playback Frequency Response Adjustment and Measurement (CrO_2)	16
8.11	Record/Playback Frequency Response Adjustment and Measurement (Metal)	17
8.12	dbx Level Adjustment	17
8.13	dbx Circuit Timing Current Adjustment	17
8.14	Record/Playback Level Adjustment and Measurement	18
9.	VOLTAGE CONVERSION	19
10.	DIAGRAMS	20
10.1	Level Diagrams	20
10.2	Block Diagrams	21
10.3	Wiring Diagrams	22
11.	EXPLODED VIEWS AND PARTS LIST	26

MARANTZ MODEL SD530/SD630 STEREO CASSETTE DECK

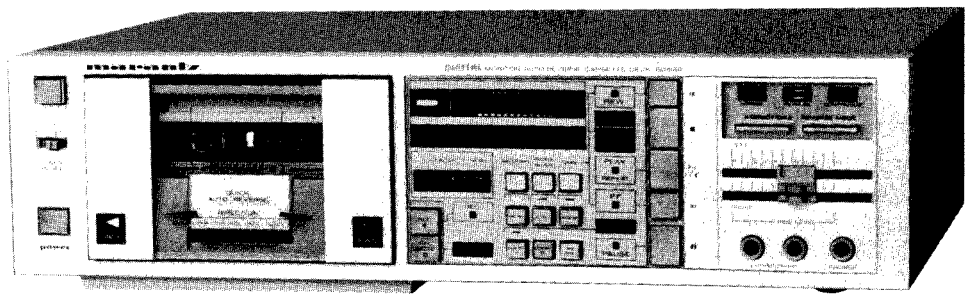

SD530

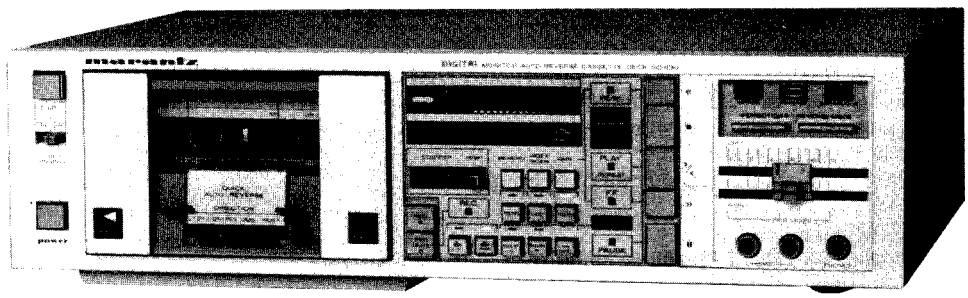

SD630

INTRODUCTION

This service manual are prepared for use by Authorized Warranty Station and contains service information for Marantz Stereo Cassette Deck.

Servicing information and voltage data included in this manual are intended for use by the knowledgeable and experienced technician only. All instructions should be read carefully. No attempt should be made to proceed without a good understanding of the operation of the Cassette Deck.

The parts list furnishes information by which replacement parts may be ordered from the Marantz Company. A simple description is included for parts which can be usually obtained through local suppliers.

1. SHOCK, FIRE HAZARD SERVICE TEST:

CAUTION: After servicing this appliance and prior to returning to customer, measure the resistance between either primary AC cord connector pins (with unit NOT connected to AC mains and its Power switch ON), and the face or front Panel of product and controls and chassis bottom.

Any resistance measurement less than 1 Megohms should cause unit to be repaired or corrected before AC power is applied, and verified before return to user/customer.

Ref. UL Standard NO. 1270. Para. 66. 3. D (Mandatory Test after servicing Electrical Appliances, effective 7-1-83).

2. P.W. BOARDS

As can be seen from the circuit diagram, the chassis of your Cassette Deck consists of the following units. Each unit mounted on a printed circuit board is described within the square enclosed by a bold dotted line on the circuit diagram.

1. P/B AMP/Main ..... mounted on P.W. Board PJ01
2. Timer Switch ..... mounted on P.W. Board PU01
3. Input/Output ..... mounted on P.W. Board PW01
4. Remote/E.Q Jack ..... mounted on P.W. Board PW02
5. Key Switch/Rec Volume.... mounted on P.W. Board PY01
6. Fwd LED ..... mounted on P.W. Board PY02
7. Reverse LED ..... mounted on P.W. Board PY03
8. dbx ..... mounted on P.W. Board P701 (SD630 only)
9. Power Switch ..... mounted on P.W. Board P800

3. TEST EQUIPMENT REQUIRED FOR SERVCING

For measuring or checking your Cassette Deck, the following instrkuments and materials are necessary.

- VTVM
- Audio Oscillator (AF OSC)
- Attenuator (600 Ω)
- Oscilloscope
- Bandpass Filter (1 kHz)
- IEC A-Curve Filter
- Wow and Flutter Meter
- Torque Meter (Cassette Type)
- Digital Frequency Counter
- Distortion Meter
- Blank Tapes (Completely erased with bulk eraser)
  TDK AC-212 (Normal)
  TDK AC-512 (Special/CrO2)
  TDK AC-711 (Metal)

NOTE: If any doubt is noted in a measured value, use new tape.

• Test Tapes	(New Tape)
MTT-111	Wow and Flutter, Tape Speed
MTT-112	Measurements of Output Level
MTT-112B	Signal-to-Noise Ratio
MTT-150	Adjustment of Output Level
MTT-256	Frequency Response (for Normal)
MTT-356	Frequency Response (for Special/ CrO_2, Fe-C_2 and Metal)
MTT-121	Cross Talk
MTT-141	Channel Separation

4. DESCRIPTIONS OF MECHANISM AND CIRCUIT

4.1 RECORD/PLAY SIGNAL SYSTEM IC (HA 12051) FOR DECK SYSTEM

4.1.1 PLAYBACK amplifier

The PB amplifier is provided with a capacitor/charge-up circuit to accelerate rising of V_{REF}. The gain is 47 dB (f=400 Hz). Pins ⑤ and ㉖ form a switching circuit 120 μs and 70 μs. The time constant is switched by the terminal voltage of Line Mute/P.B EQ control of the pin ⑫.

H (10V) : Mute OFF, τ = 70μs
M (5V) : Mute OFF, τ = 120μs
L (0V) : Mute ON, τ = 120μs

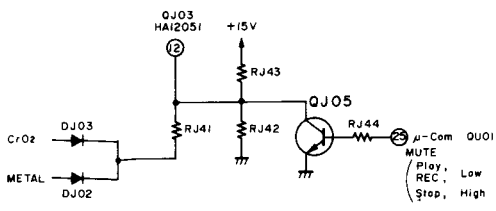

Fig. 1

With the circuit shown in Fig. 1, a time constant switching voltage is applied to pin ⑫. When a normal tape is used, a voltage of 5V is applied to pin ⑫ by the split resistors RJ42 and 43. When a CrO_2 or metal tape is used, 15V is applied to RJ41, and 10 V is applied by RJ41, 42 and 43.
The operation range of this pin is as follows:
70μs 9~14V. 120μs 4~6V.

4.1.2 Recording amplifier

A Rec Mute circuit is provided, which is muted by pins ⑩ and ㉑. Signals of Stop Play: "H" and REC: "L" are generated from pin ㉔ of μ-com. (QU01) and applied to pin ⑲ of Rec Mute control. The operation range of this pin ⑲ is as follows:
REC MUTE OFF 0 −1.5V
REC MUTE ON 4.5−14.0V
The rec signal generated from Q601 Dolby nd dbx decoder is inverted and amplified by operation amplifier Q504 and applied to pin ⑳ of QJ03, from which recording signals suitably compensated for each tape position are supplied to pin ㉓. The peripheral circuit of pin ㉑ compensates middle and low frequency ranges when a normal tape is used. With QK04 turned on, the damping amount and high frequency range are compensated with LK01, RK11 and CK09. The peaking frequency is set to 19kHz (same as for a CrO_2 tape). when a CrO_2 tape is used, QK01 turns on and the middle frequency range is compensated with CK03, CK05, RK05 and RK07. When a metal tape is used, QK05 turns on and the middle frequency range is compensated with CK13, CK15, RK11 and RK13, and since QK04 is turned off, the high frequency range is compensated with LK01, RK11, CK11 and CK09.
The peaking frequency is set to 21kHz. The compensating circuit diagram is shown below.

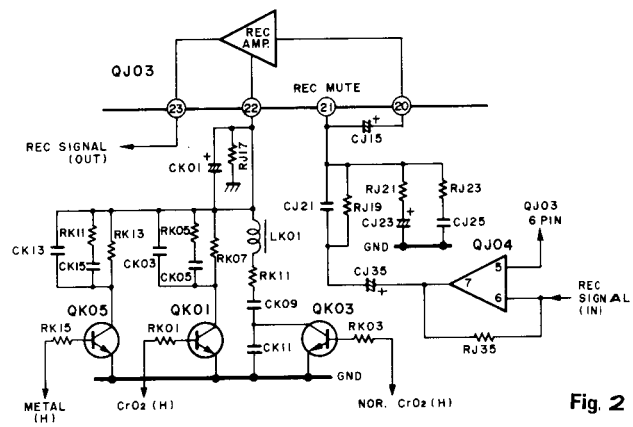

Fig. 2

4.1.3 Headphone amplifier

Muting of the headphone amplifier is made according tothe input voltage of the time constnt swithcing terminal pin ⑫ of the Play Back amplifier.

4.1.4 Mute system

REC mute and LINE mute systems are provided as described in the above paragraphs. In addition to these systems, there is a mute circuit (pins ⑮ and ⑯) which operates at turning on and off Vcc and reduces PoPs applied to the LINE OUT when the power switch is turned on and off. (Muting at turning the power ON)

Muting is effected at the same time of turning on Vcc, and is held on for about 740 ms after the power is turned on. The holding time is determined by the IC resistance and the time constant of charging the capacitor (47μF) of pin (25), which are obtained as a result of operation of the constant-current circuit contained in the IC.

(Muting at turning the power OFF)

When the supply voltage drops to a certain level (Vcc=11.0V), muting is effected and thereafter, the muting is retained by comparing the potential at pin (25) with IC setting reference level. The level of turning off the constant-current circuit in IC is detected, and thereby the muting is effected. These two systems constitute the mute systme which operates at turning the power off.

4.1.5 The block diagram of HA12051 IC interior are shown below.

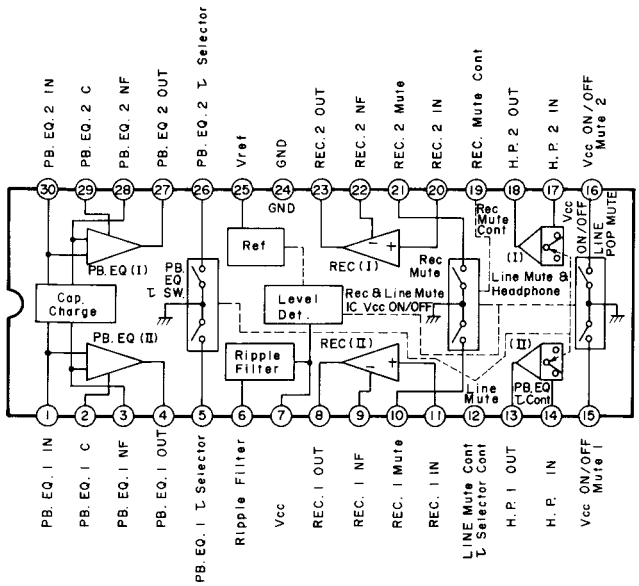

Fig. 3

4.2 DOLBY IC HA12038NT

The HA12038NT Dolby B-C NR IC used for SD630/530 is adjustment free (Dolby level 580mV), comprising the Dolby C type system in one chip. The block diagram is shown below.

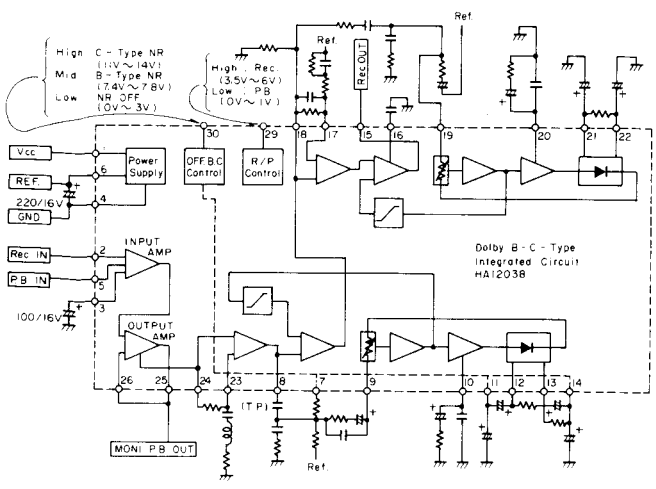

Fig. 4

4.3 SKIP OPERATION

4.3.1 Playback speed and time constant

The speed difference between normal playback (PLAY) and quick playback (CUE/REVIEW) is about 13.5 times at the beginning of tape winding and 31 times at the end if the FF/REW time is assumed to be 80 seconds. The inter-tune interval has been set to 4 seconds for playback, and the interval is 129 – 296 msec in the CUE/REVIEW mode.

4.3.2 Setting μ-com

The μ-com used in this model employs the time read system for the inter-tune interval. The reading time is 3 sec. in the play mode and 100 msec. in CUE and REVIEW modes. Correction of an overrun caused by a delayed mechanism accommodating time after detection of an inter-tuen interval in CUE and REVIEW modes is also programmed: the counter pulses generated in the period from detection of inter-tune interval to tape stop is memorized and the tape is rewound by the length equivalent to the counted number. This prevents malfunction due to overrun.

4.3.3 Noise reduction

An encode tape using noise reduction with an extremely large encode factor such as Dolby C NR or dbx can not be decoded for Cue/Review playback, and it is necessary to set the level and limit the band separately from NR-OFF.

4.3.4 Description of SKIP circuit

Operation of the inter-tune interval detecting circuit is described below. The circuit diagram is shown in Fig. 6 The gain and frequency characteristic are shown in Fig. 5.

1. Basic operation
   The playback equalizer output is synthesized by RK51 and RK52, and applied to QK54, the buffer provided as the input impedance of QK56 being too low. The output of QK54 is provided with the gain of about 58 dB by QK54 and QK57, and the band limited to improve the S/N ratio of the detection system.
   The signal is differentiated by CK58 and RK67. The differentiated output appears in the collector of QK58 and is supplied to pin (35) of μ-com QU01. The μ-com QU01 detects playing of tape when the peak value of the output of QK58 goes below 5.3V.
2. Band shift
   There is a speed difference of 20 – 25 times between normal tape play and quick play, and the band distribution of the signal to be played changes likewise. In normal play mode, both ends of CK53 are shorted with QK55, and limitation of the low band is determined by CK54.
   In CUE and REVIEW modes, as QK55 is turned off by the output of pin (25) of QU01, the low band is limited. As shown in Fig. 6, the frequency is 2kHz in normal play mode and the band pass filter characteristic 6 dB/oct of 5.2kHz in CUE and REVIEW modes. The detectable inter-tune interval is about 3 sec. in normal play mode and about 100 msec. in CUE and REVIEW modes, which has previously been programmed in the μ-com QU01. (Considering the mechanism operation time, the nominal detectable time is 4 seconds.)

3. Gain shift

As an element of the inter-tune interval detecting circuit, there is a gain shift in addition to a band shift. The gain shift is provided for gain increase by the frequency shift in normal play, CUE and REVIEW modes and encoding of noise reduction (Dolby-C, dbx). As shown in Fig. 5, it is as shown below for normal speed NR-OFF.

	NR-OFF	Dolby-C, dbx
Normal speed (2 kHz)	0	−12.8
Cue/Rev)5.2 kHz)	−6.6	−13.8

Each switching is as follows:

a) At CUE/Review QK53 "ON" and by RK57
b) Dolby-C QK52 "ON" and by RK55
c) dbx QK51 "ON" and by RK54

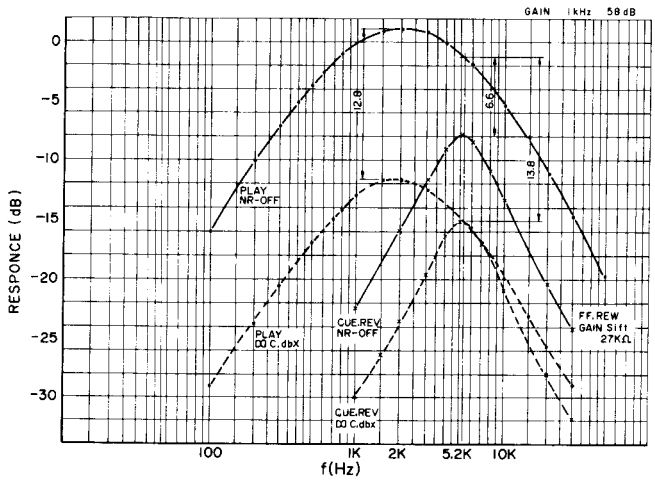

Fig. 5

4.4 dbx DISK

4.4.1 Description of NR/disc switching circuit

QU83, QU81 and QU82 are switched by operating each NR switch and the REC/PLAY switches, and a signal is output from the Dolby dbx (disc) and applied to the REC amplifier and LINE amplifier. The conditions are described below.

NR	REC		Play	
	REC Amp.	LINE Amp.	LINE Amp.	
OFF	DD	DD	DD	
Dolby B-C	DD	DD	DD	
dbx	dbx	DD	dbx	
disc	DD	dbx	dbx	

Fig. 7 shows the switching circuit.

The circuit is constituted so that switching is madeby final of each processor, Dolby monitor OUT, Dolby Rec OUT, Encode OUT and Decode OUT.

Q707 in the dbx P.W.Board is switched so that the disc (record) signal encoded at disc position is applied to Q705 decoder through the filter. This suppressesthe rumble noise of a record player and optimized playing of dbx encoded discs. The high-pass filter has the characteristic of eliminating a signal of less than 30Hz.

QJ06 transistor turns on at the disc position. The output of pin (25) of μ-com is muted to turn QJ05 off, hold the voltage at pin (12) of QJ03 and turn off the muting circuit in IC. This operation is necessary because as the output of pin (25) of μ-com (Audio Mute) is high at STOP and low at PLAY/REC and pin (12) of QJ03 (HA12051) turns off muting at 10V or 5V and turns on muting at 0V, disc playing is impossible in STOP mode and QJ06 is added to enable disc playing in STOP made also.

In the case of disc recording, Q601 outputs the signal encoded with Dolby off from REC OUT pin (15) . The signal is applied to REC IN pin (20) of QJ03 through QU82. At this time, the monitor output is sent from the decoder to pin (17) of QJ03 through QU81. The encoded output of pin (25) of Q601 P.B/monitor is turned off with QU81. (N1: High, N1: Low,... at disc, disc Rec)

The table shows switching and control levels in various NR and modes.

CIRCUIT DIAGRAM

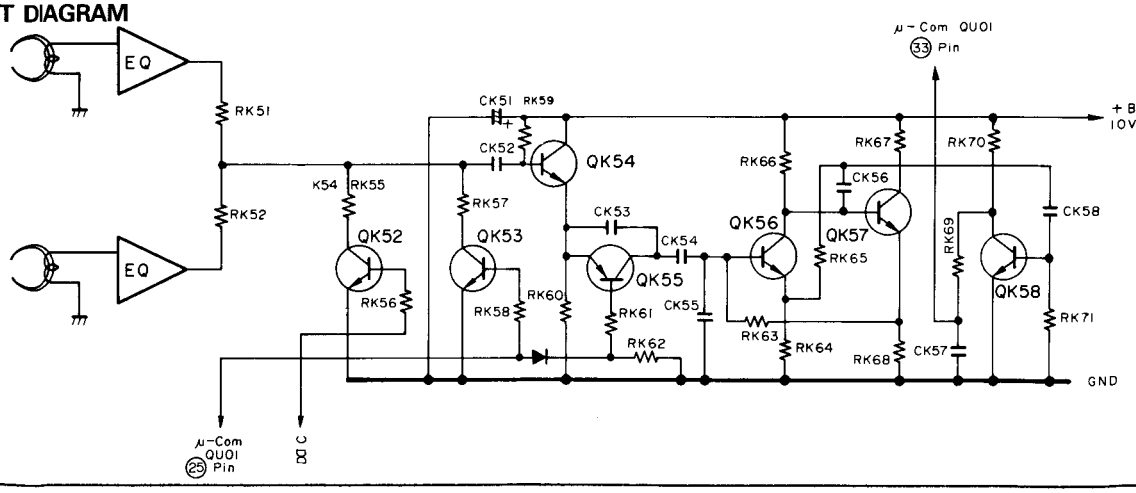

Fig. 6

NR	MODE	N_1	$\bar{N}_1$	N_2	$\bar{N}_2$	N3	$\bar{N}_3$
OFF B/C	Play	H	L	–	–	L	H
	REC			L	H	L	H
	Monitor	H	L			L	H
dbx	Play	H	L	–	–	L	H
	REC			H	L	L	H
	Monitor	H	L			L	H
Disk	REC	L	H			H	L
	Monitor			L	H	H	L

SHOWS THE SWITCHING CIRCUIT.

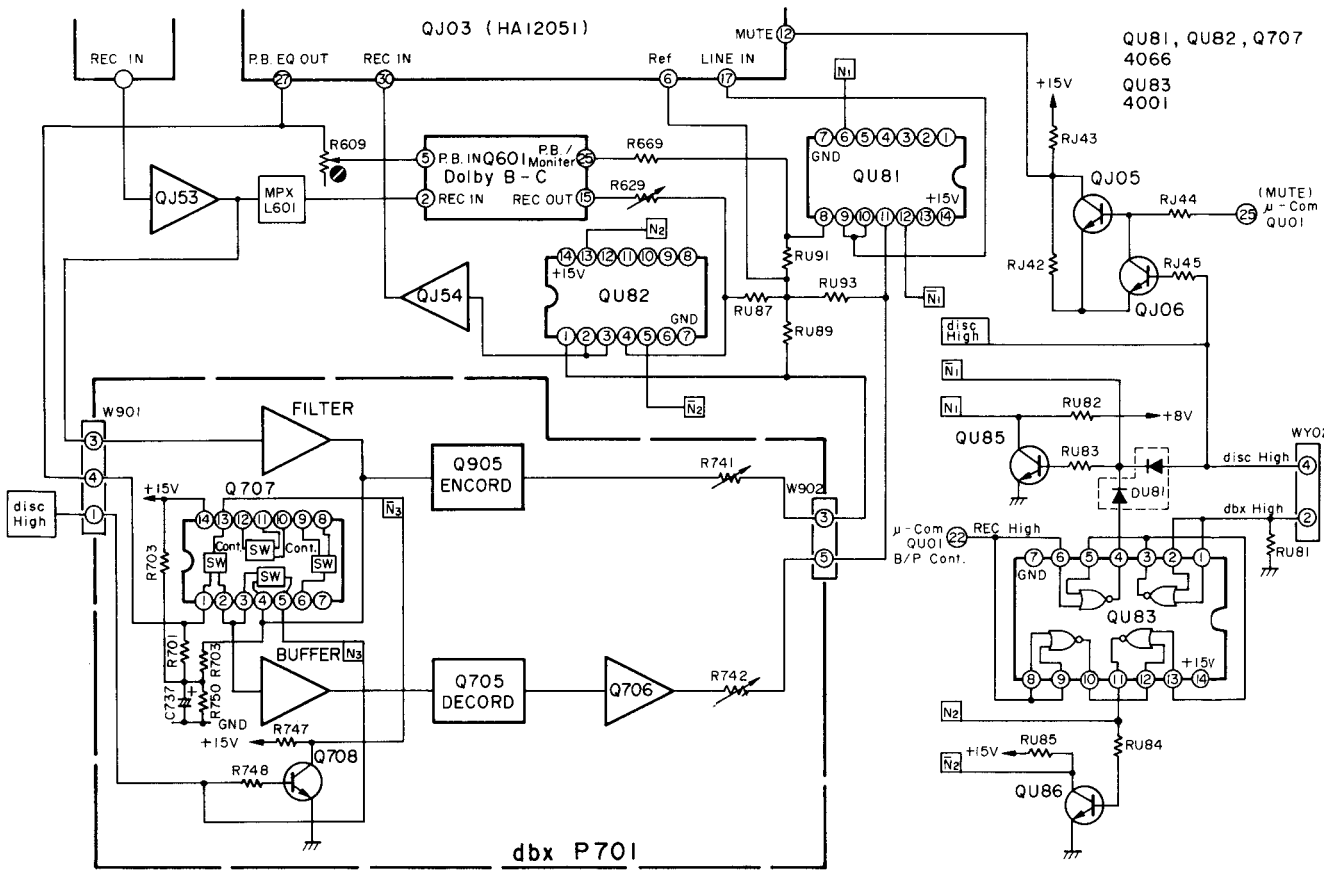

Fig. 7

4.5 PHOTO SENSOR CIRCUIT

The tape end detection system uses the transmission system: the infrared light emission diode GL-350 is combined with the phototransistor PT-350 (QU71) so that the phototransistor receives a light in the tape leader of a cassette tape, a voltage is applied to the gate of QU15 FET to turn the FET on and the output of E3 pin (13) is applied to A0 pin (21) and the μ-com is set in the Forward ⇄ Reverse mode. The circuit is shown in Fig. 8 "Schematic Diagram of μ-com".

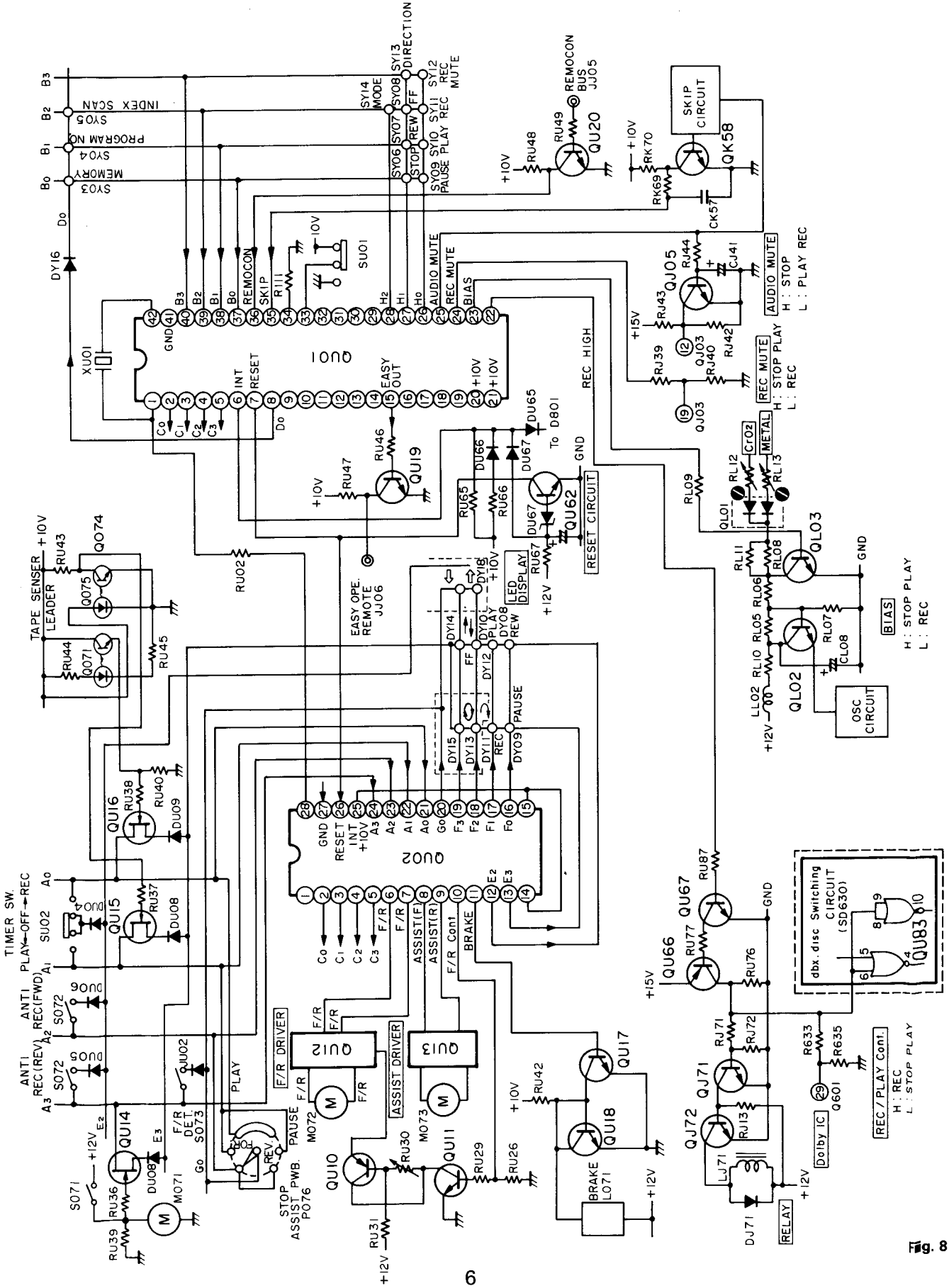

Fig. 8

5. CIRCUIT OPERATION (μ-COM AND PERIPHERAL CIRCUITS)

5.1 INITIAL CHECK

With a tape loaded in the unit, turn the power switch ON.
(1) The supply reel rotates clockwise.
(2) When the take-pu reel has rotated 1/4 of a full turn, the brake (L071) turns ON.
(3) The brake turns OFF after one second.
(4) The relay is set in REC mode after one second, and it returns to PLAY mode after a further one second.

If operation (1) is not obtained:

a) Check the waveforms at pin ① of QU01 and pin ㉘ of QU02.

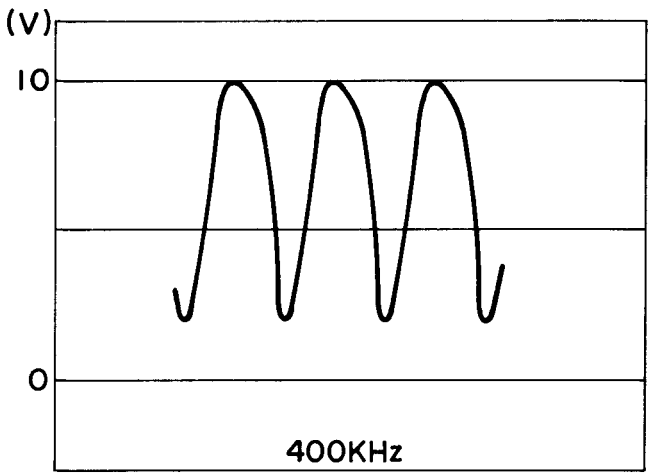

b) Check the waveforms at pin ⑦ of QU01 and pin ㉖ of QU02.

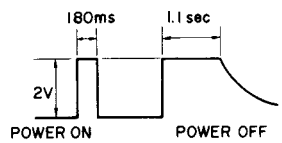

Fig. 9

If these waveforms are not obtained, the assist motor (M073) is left rotating, PLAY to STOP modes are repeated and the operation stops with the head chassis left going into the PLAY mode position. Check the reset circuit (QU62) and peripheral circuit.

c) Check 9 – 10V DC is applied to pin ⑥ of QU01.
d) Check the peripheral circuit of the motor switch (S071).
e) Check the peripheral circuit of QU12 (F/R driver).
f) Check the wiring of the F/R motor (M072).

If the reel rotates continuously for about 5 seconds in the operation (2):

a) Check the photo-interrupter (Q071) for detection failure. Check the peripheral circuit of QU15.

If the brake fails to turn on in operation (3):

a) Check the waveform at pin ⑪ of QU02.

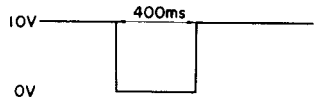

Fig. 10

b) Check the pheripheral circuits of QU17, QU18 and brake solenoid (L071).

When operation (4) fails:

a) Check pin ㉒ of QU01.
1 For one second after turning the power ON

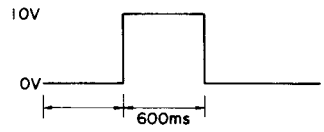

Fig. 11

b) Check the peripheral circuits of QU66 and relay (LJ71).

Check a bias is generated at TP1, TP2, or TP3, TP4 during operation (4).

a) If the bias is not generated.
Check the waveform at pin ㉓ of QU01.

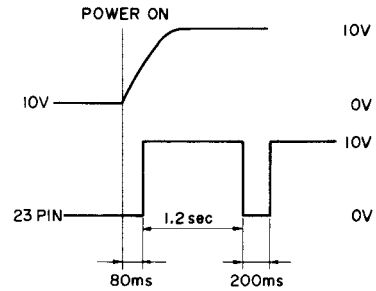

Fig. 12

b) Check the peripheral circuits of QL03 and LL01.

(5) Operate the direction key with the cassette tape loaded, and check the head is reversed and the LEDs (direction indicators) of DY17 and 18 are alternately reversed.

If there is no inversion:

a) Check the output waveforms at H1 pin ㉗ of QU01.
Check a signal is applied to B3 pin ㊵.

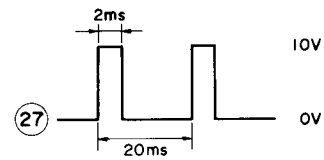

Fig. 13

b) Check if the head is caught by something (e.g. head lead wire) when it rotates.
c) Check the peripheral circuits of the auxiliary motor (M073) and QU13.

(6) Play a cassette tape with the leader tape, and check the tape is reversed at the leader tape portion.

If the tape fails to reverse:

a) Check the tape running mode is "⇉" or "⇄". The tape is reversed in this mode.
b) Check the peripheral circuits of Q074, 75 and QU14.
c) Load a blank tape and set PLAY mode. Check the emitter output voltage of 6.5 – 9V of the phototransistor Q074 is applied to pin ① of DU07.

To check the auto reverse fucntion, use the tape specified (AC-212, AC-512 or AC-711).
The light of the light-emitting diode QO75 penetrates through the tape leader of a cassette tape. The phototransistor Q074 turns on to switch FET QU15. Pin ⑬ E3 of QU02 is applied to pin ㉒ of QU02. Pin ⑬ E3 of QU02 is instructed to pin ㉒A1. μ-com QU02 is set to reverse (forward)mode.

5.2 MOTOR DRIVE CIRCUIT

(1) F/R motor drive (QU12)

Mide		QVO2 ⑥	QVO2 ⑦	QVO2 ⑩
Forward	STOP	L	L	L
	F.F.	H	L	L
	REW	L	H	L
	PLAY(REC)	H	L	H
Reverse	F.F.	L	H	L
	R.EW	H	L	L
	PLAY(REC)	L	H	H

L=0V H=10V

NOTE: In the auto reverse mode, FF and REW ARE FF and REW against the direction mode.

Forward

a) When pin ⑥ of QU02 is set to "H" level, the take-up reel rotates. (FF operation)
Reverse: Pin ⑥ "L", pin ⑦ "H"

b) When pin ⑦ of QU02 is set to "H" level, the supply reel rotates. (REW operation)
Reverse:Pin ⑦ "L", pin ⑥ "H"

c) when both pins ⑥ and ⑦ of QU02 are set to "H" or "L" level, neither supply or take-up reel rotates. (STOP operation)
Reverse: Common

d) When pins ⑥ and ⑩ of QU02 are set to "H" level, the take-up reel rotates at low speed. (PLAY/REC operation)
Reverse: Pins ⑦ and ⑩ "H"

QU12 and F/R drive IC BA6109 form a circuit to absorb the counter electromotive force of the motor and effect the brake when FORWARD or REVERSE mode is switched to STOP mode. In the set, at changing the mode from FORWARD PLAY/REC to STOP, FF to STOP or REVERSE REW to STOP, an instruction is given to the opposite port with no output generated as shown in Figs. 14 and 15 and then, a high level output is generated for 400 ms and both ports are set to high level, and the reel motor M073 is braked as a result.
By this operation, cooperating with the brake L071, secure braking is achieved.

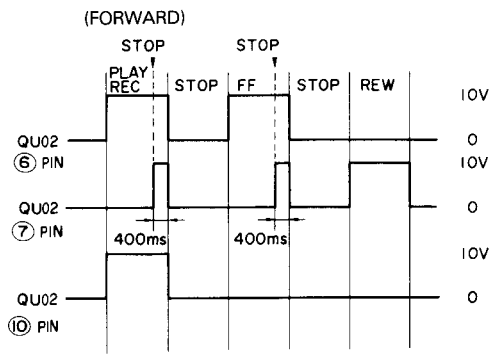

Fig. 14

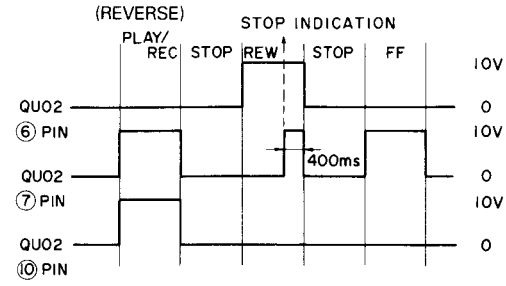

Fig. 15

(2) Assist driver (QU13)
Forward

a) When pin ⑧ of QU02 is set to "H" level, the head chassis rises. (STOP→PLAY)
Reverse:Pin ⑧ "L", pin ⑨ "H"

b) When pin ⑨ of QU02 is set to "H" level, the head chassis lowers. (PLAY→STOP)
Reverse: Pin ⑨ "L", pin ⑧ "H"

c) When both pins ⑧ and ⑨ ofQU02 are set to "H" and "L" levels, the head chassis stops.
Reverse: Common

At changing the mode from PLAY to PAUSE, PAUSE to PLAY or PAUSE to STOP, the μ-com output (QU02) is the same as changing from PLAY to STOP or STOP to PLAY, as shown in Fig. 16.
Like QU12 and F/R drive IC, QU13 and assist motor drive IC BA6208 contain the circuit to effect braking when both input signals are at "H" level. The μ-com is programmed so that a high level output is generated at pins ⑧ and ⑨ of μ-com QU02 as shown in Fig. 16.

- STOP→PLAY, PLAY→STOP operating time 150 msec
- PLAY→PAUSE, PAUSE→PLAY operating time 80 msec

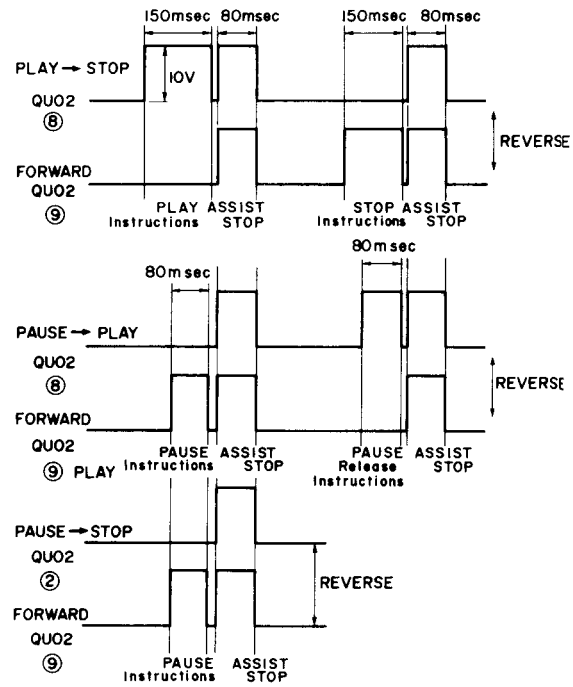

Fig. 16

According to Fig. 16, a high level signal is generated simultaneously at both pins ⑧ and ⑨ of QU02 for 80 msec to sto the assist motor (M073).

5.3 OPERATION

5.3.1 PLAY operation

a) Press the PLAY switch (SY10). Then the output of pin ㉖ Ho of QU01 is sent to pin ㊳ B1 and the microcomputer (QU01) detects that the PLAY switch has been pressed.
b) A play instruction is sent from pins ② C0, ③ C1, ④ C2 and ⑤ C3 of QU01 to the same pins of QU02.
c) Receiving the instruction, pin ⑧ < ⑨ > are set to "H" level, the assist driver (QU13) is controlled, the assist motor (M073) rotates and the head moves toward the tape.
d) When the contact of the assist board interlocking with the assist motor (M073) comes to the PLAY position, the microcomputer (QU02) knows that PLAY operation has been completed.
e) when pins ⑧ and ⑨ of QY02 are set to "H" level, the tape stops at the PLAY position.
f) Set pins ⑥ and ⑩ of QU02 to "H" level <pins ⑦ and ⑩ to "H" level>. Rotate the take-up reel at low speed to take up the tape.
Descriptions in < >refer to the reverse mode.

5.3.2 FF/REW operations

a) As in PLAY operation, when the FF (REW) switch SY08 (SY07) is presed, QU01 detects that the FF (REW) switch has been pressed.
b) An FF (REW) instruction is sent from QU01 to QU02.
c) Receiving the instruction, in the case of FF mode, pin ⑥ < ⑦ > is set to "H" level. In the case of REW mode, pin ⑦ < ⑥ > of QU02 is set to "H" level. Then, the reel is rotated in each direction to take up the tape.

Descriptions in < > refer to the reverse mode.

5.3.3 STOP operation

a) When the STOP switch (SY06) is pressed during PLAY mode, the same detection as in the PLAY mode is made.
b) A STOP instruction is sent from QU01 to QU02.
c) Set pins ⑥ and ⑩ of QU02 to "H" level (for 400 msec) to stop tape taking up.
d) Set pin ⑧ < ⑨ > of QU02 is set to "H" level, the assist driver (QU13) is controlled, the assist motor (M073) rotates and the head moves in the STOP direction.
e) When the contact of the assist board (P076) interlocking with the assist motor (M073) comes to the STOP position, the microcomputer (QU02) knows the STOP operation has been completed.
f) When pins ⑧ and ⑨ of QU21 are set to "H" level (for 80 msec), the head stops at the STOP position.

5.3.4 Direction operation (For → Rev)

a) When the direction switch (SY13) is pressed, the output of pin ㉗ H1 of QU01 is sent to pin ㊵ B3 and the microcomputer (QU01) detects that the direction switch has been pressed.
b) A direction instruction is sent from pins ② C0, ③ C1, ④ C2 and ⑤ C3 of QU01 to the same pins of QU02.
c) The reel motor (M072) stops. The contact of the assist board (P076) interlocking with the assist motor (M073) passes over the STOP position. Searching the PLAY position starts. when the contact goes into the reverse side of the assist board (P076), the F/R DET switch (S073) is turned on and the μ-com of QU02 is set to the state for the reverse mode.
d) When the contact of the assist board (P076) comes to the PLAY position, the microcomputer (QU02) knows that the PLAY operation is completed.
e) The operations to be made hereafter are the same as e) and f) of PLAY operation.

5.3.5 REMOTE CONTROL operation

a) Connect the remote control receiver to the REMOCON BUS terminal (JJ05). (Set the remote control switch to the "1" position in the deck.)
b) Operate the remote control transmitter to the TAPE 1 position. Operate the deck.
c) Set the remote control switch (SU01) to the "2" position in the deck and make sure that the remote control is not effected.
d) Set the remote control transmitte to the TAPE-2 position and make sure that the remote control is effected.

5.3.6 EASY OUT operation

a) Connect the amplifier to the EASY OUT terminal (JJ06). (Set the REMOTE switch to the "1" position in the deck.)
b) Set the FUNCTION switch to the TUNER position in the amplifier.
c) When the deck is set to PLAY mode, the FUNCTION switch of the amplifier is automatically switched to TAPE 1.

NOTE: When the REMOTE switch (SU01) is switched, the output waveform at pin ⑮ of the microcomputer (QU01) becomes as shown below.

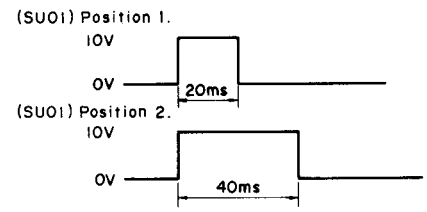

Fig. 17

6. DISASSEMBLY

6.1 REMOVING THE TOP COVER

Remove the six screws 1~6.

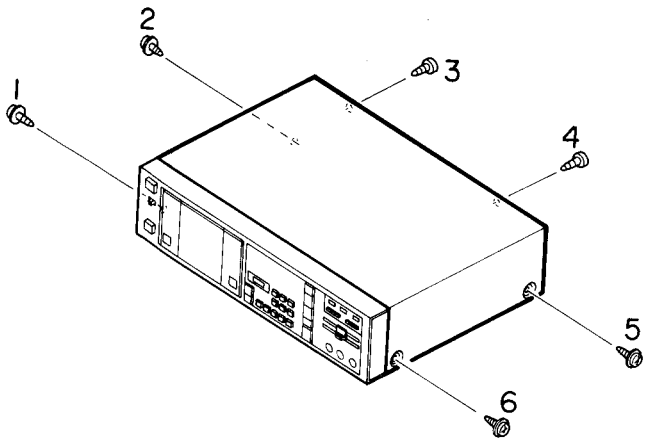

6.2 REMOVING THE FRONT PANEL

Remove knob A.
Remove three screws 1~3.

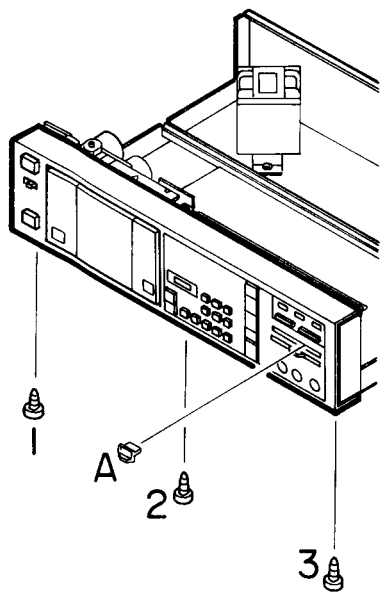

6.3 REMOVING THE MECHANISM

Remove three screws 1~3.

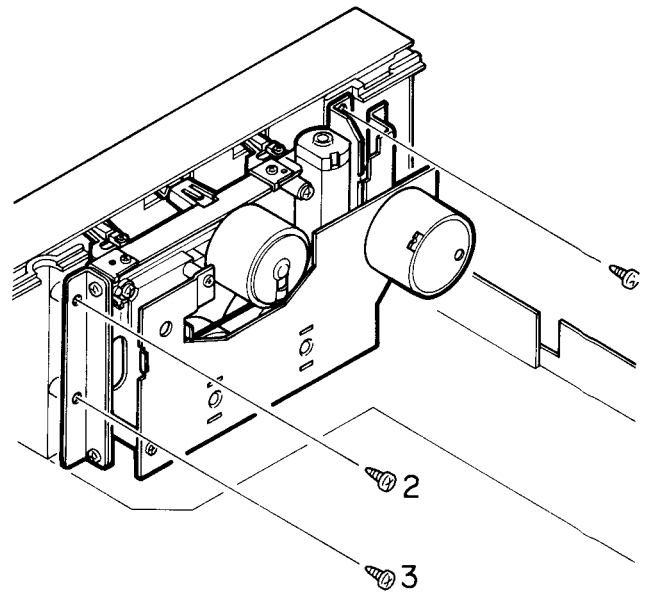

6.4 REMOVING THE P.W. BOARD

Remove seven screws 1~7.

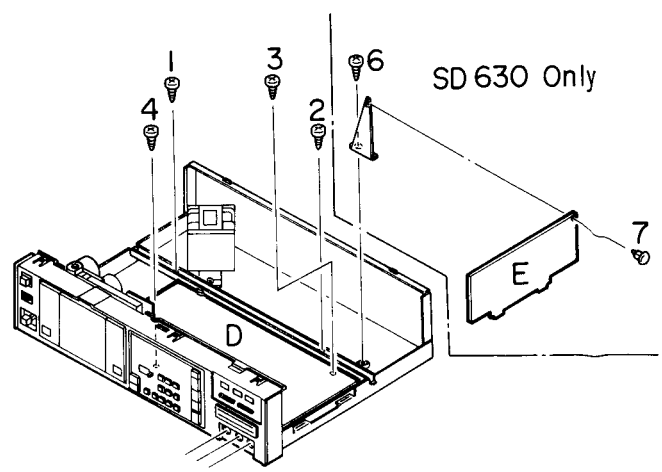

7. OPERATIONAL DESCRIPTION OF AUTO REVERSE MECHANISM

7.1 HEAD CHASSIS CONTROL AND HEAD ROTATION

The assist motor (1) rotates the worm wheel (2) and the head chassis (5) is raised by the cam (3-A) formed in the worm wheel via the play arm (4). In play mode, the cam (3-A) rotates at maximum speed. In QMS or pause mode, the cam stops in the middle to control the head chassis for each operation mode. When changing play mode to stop, or pause mode to stop; the assist motor rotates reversely to return the cam, and thus the head chassis, to the original position.

7.2 HEAD ROTATION IN REVERSE MODE

Fig. 19 shows that the mechanism is on standby for reverse mode. To set this condition to normal stop mode (press the DIRECTION button when the mechanism is in the stop position), the assist motor rotates, turning the worm wheel (2) 100°. The head is now rotated. The select arm (7) is shifted in the direction of the arrow by the cam (3-B) formed in the worm wheel, the select lever (8) is slid, the head reverse gear (9) rotates as shown in Fig. 18 and the head gear (10) is rotated by 180° to reverse the head. The contact (11) which is attached to the wrom wheel on the reverse side of the cam comes into contact with switch P.W.Board (12) to detect the worm wheel (2) position.

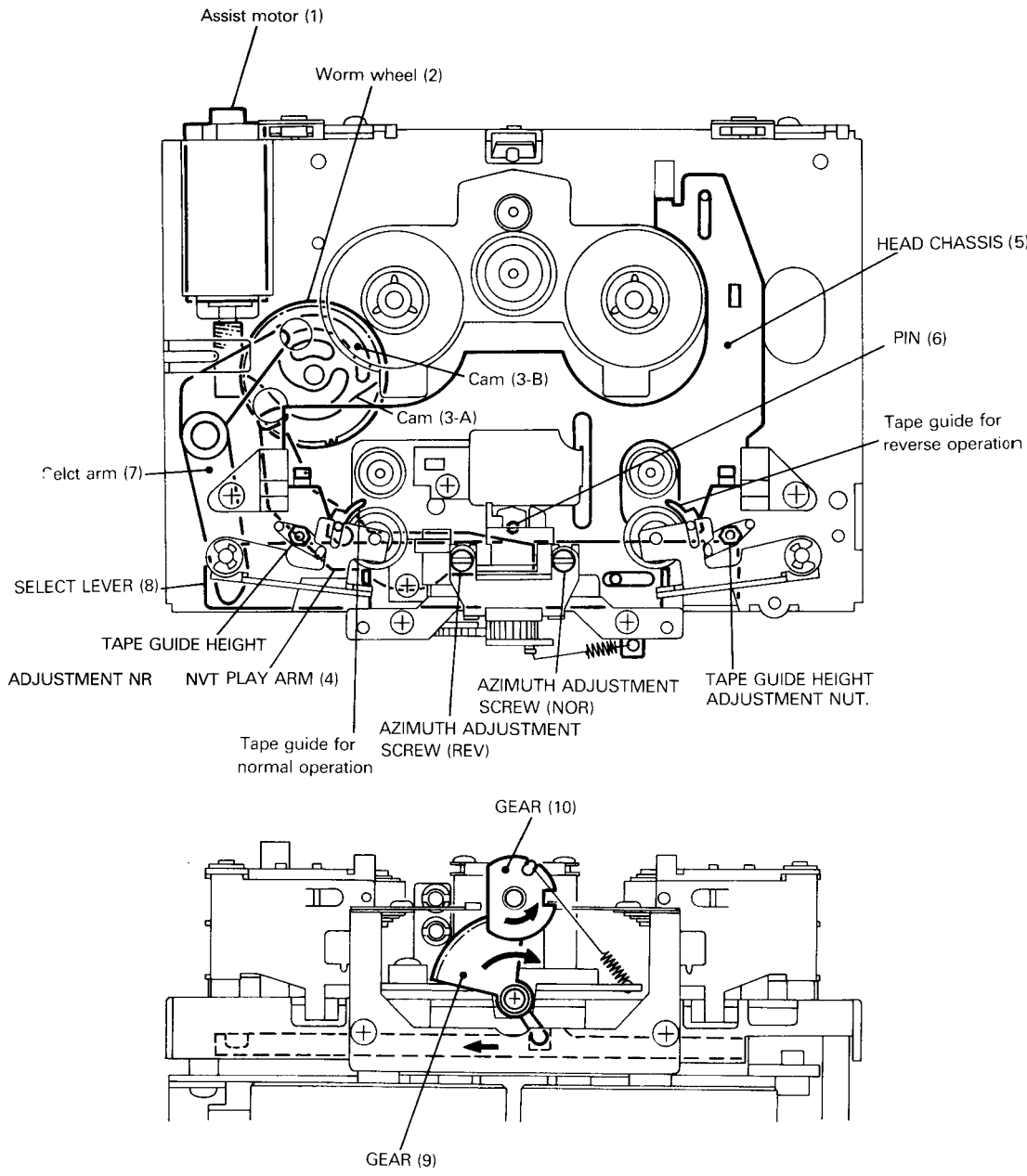

Fig. 18

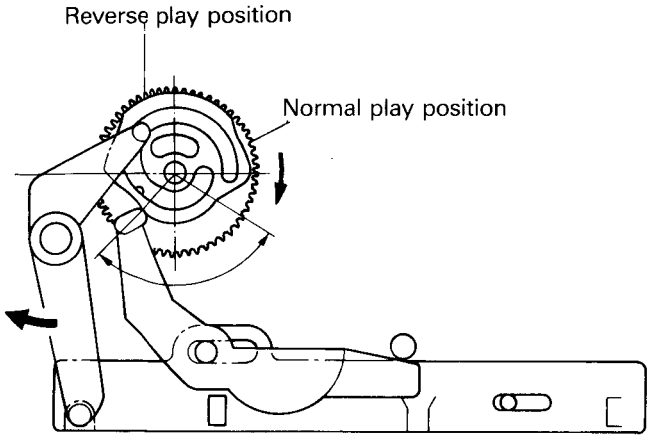

Fig. 19

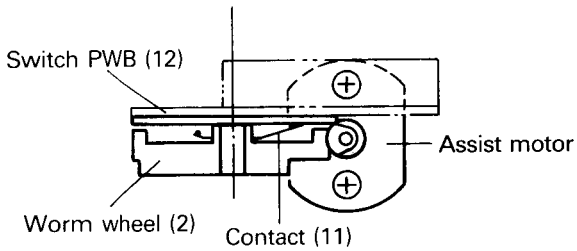

Fig. 20

7.3 NOTES ON REPLACING F/R ARM ASSEMBLY AND F/R MOTOR

1. The nylon oil stopper should be pressed in gently. When pressing in the oil stopper, allow a space of 0.2mm between the poly washer and oil stopper.
2. When installing the brass pulley with screw, allow a space of 0.1 – 0.2mm between the pulley and poly washer above the F/R arm.

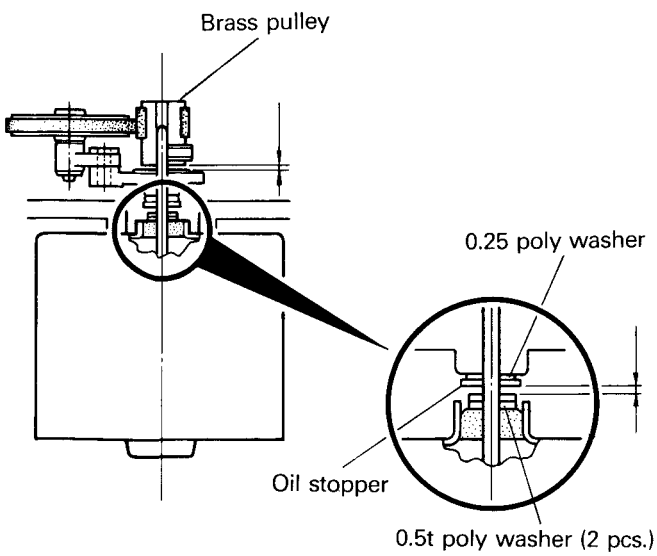

Fig. 21

7.4 PLAY TAKE-UP TORQUE

Turn trimmer resistor RU30 to adjust the playback take-up torque. The adjustable range is 40~50 g-cm.

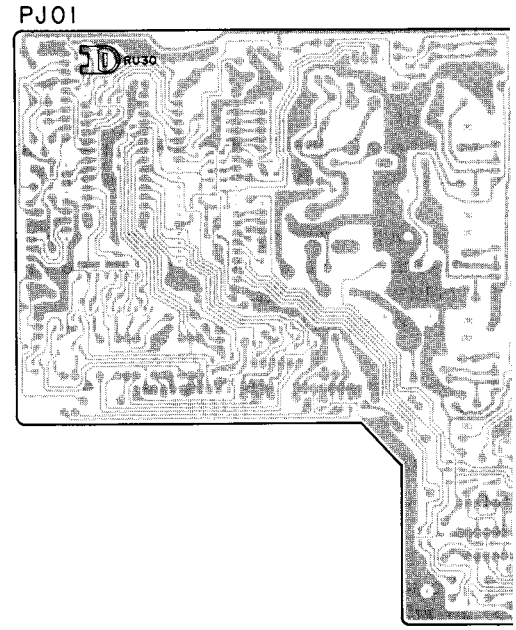

8. ELECTRICAL ADJUSTMENTS

Precautions for Adjustment and Measurement

1. Before playing back the test tape, thoroughly demagnetize the heads, capstan and similar metal parts using an erase, as the test tape-recorded tone is easily erased.
2. Do not place the test tape on any measuring instrument.
3. Do not put the test tape near a place where the eraser is used.
4. Method of Demagnetization: Turn the eraser power switch on at a position far away from the heads. Bring the eraser close to the heads, capstan and other parts to be demagnetized, and move it up and down four or five times to demagnetize. Slowly separate the eraser far away from the parts, and turn the power switch off.
5. Do not use any magnetized adjusting tool. If necessary, demagnetize with a bulk eraser from time to time in the course of each adjustment.
6. Do not turn semi-fixed resistor or coil more than needed.
7. Measure speed and wow and flutter in the normal operating state.
8. Do not apply locking bond excessively.
9. Check the line voltage and the output of low frequency oscillator 2 – 3 times a day to see if they are set as specified.

8.1 HEAD AZIMUTH ADJUSTMENT AND PLAYBACK EQUALIZER ADJUSTMENT (Playback Frequency response)

Adjusting conditions

1. Use test tape MTT-255M.
2. Set the TAPE SELECT switch to the NORMAL position.
3. Set the tape speed to 4.8cm/sec.

Procedure

(Head azimuth)

1. Play back the MTT-255M. Adjust the head azimuth adjusting screw so that the VTVM indicates the maximum value.
2. If the peak output readings of the right and left channels are different, set the screws to obtain the mechanical center between the peaks.
3. After adjustment, lock the screws with bond.

(Playback equalizer response) Checking playback frequency response)

1. Play back the MTT-255M. Let the 315Hz signal level be reference as 0dB.
2. Make sure that the 12.5kHz signal is within 1dB in reference to the 315Hz signal.
3. Make the same adjustment for the reverse side.

1. Use an adjusting screwdriver suitable for adjusting a semi-fixed resistor.

2. Head azimuth should be adjusted by the screw tightening direction.

Check items

1. When the MTT-255M is played back and the TAPE SELECT switch is changed from the NORMAL position to CrO_2 and METAL, the 12.5kHz signal level should drop 4±1 dB.
2. When the Dolby NR switch is changed from the OFF position to B, the 12.5kHz signal level drops 10 ±1dB and a further 3dB when the NR switch is set to the C position.

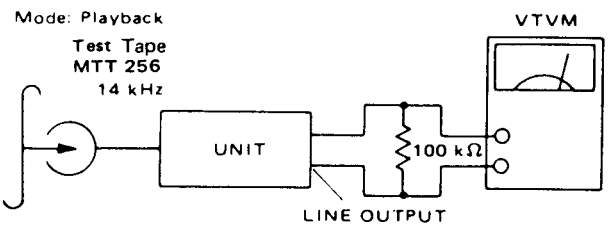

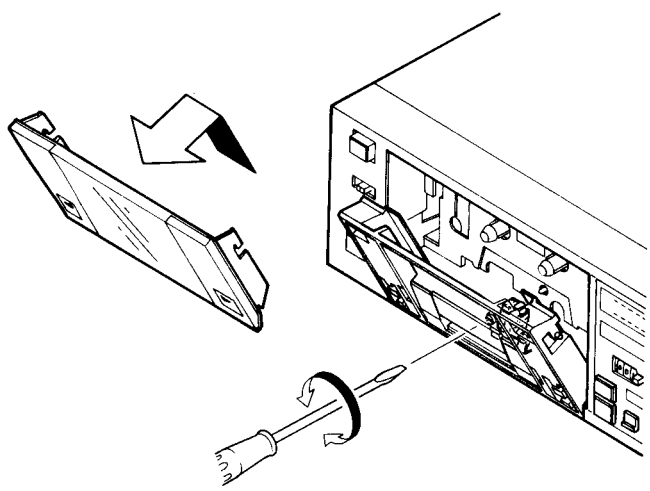

8.2 TAPE SPEED ADJUSMTNET AND MEASUREMENT

Adjusting conditions

1. Use test tape MTT-111.
2. Set the TAPE SELECT switch to the NORMAL position.
3. Set the tape speed to 4.8cm/sec.
4. Place the set horizontally.

Procedure

1. Play the middle portion of MTT-111. Adjust the speed adjusting resistor inside the motor so that the cunter indicates 2985Hz – 2995Hz.
2. To check adjustment, rewind the tape and play it back again and check to see the tape runs in the adjusted speed range.
3. Make the same check for the reverse side.

NOTES:

1. Make the adjustment in the normal operating state of the set.

2. Avoid adjustment after the set has been exposed to temperature difference.

3. If a strong shock or similar vibration is applied to the deck after adjustment, make certain that the measured tape speed has not changed.

4. Be careful that the frequency counter does not indicate an incorrect value because of too low a counter input level.

5. Make adjustment after idling for about 10 – 20 seconds.

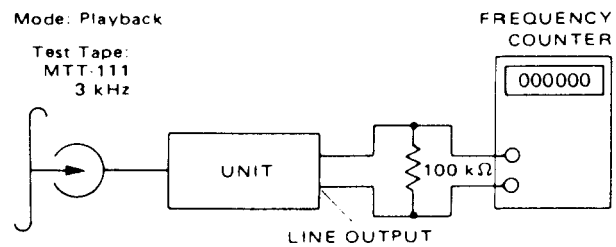

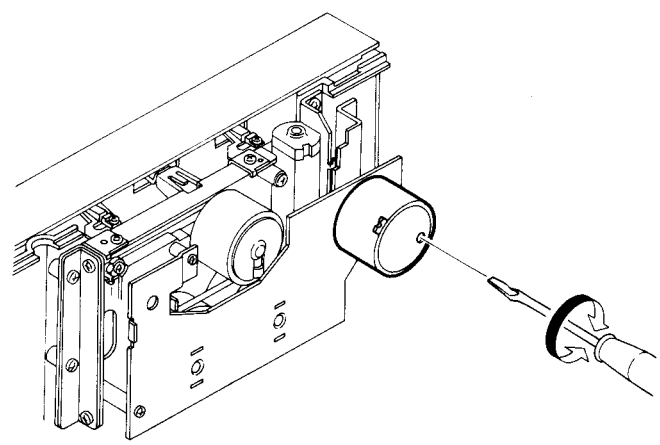

8.3 WOW AND FLUTTER MEASUREMENT

Measuring conditions
1. Use test tape MTT-111.
2. Set the TAPE SELECT switch to the NORMAL position.
3. Set the tape speed to 4.8cm/sec.
4. Place the set horizontally.
5. The wow and flutter meter function switch is NAB WTD (for U.C) and DIN WTD (for N.T.A.E).

Procedure
1. Play the MTT-111 back, and read the wow and flutter meter indication.
2. Do the same as 1 for the reverse side.

NOTES:
1. **Make the measurement at the end of the test tape.**
2. **The meter may indicate an incorrect value if the output level is too low. Make sure that the set level is enough high.**

8.4 PLAYBACK OUTPUT LEVEL ADJUSTMENT

Adjusting conditions
1. Use test tape MTT-150.
2. Set the TAPE SELECT switch to the NORMAL position.
3. Set the tape speed to 4.8 cm/sec.

Procedure
1. Play back the MTT-150. Adjust R609 (L) and R610 (R) so that a terminal voltage of 580 mV is obtained at the test points TP6 (L) and TP8 (R)
2. To check adjustment, rewind the tape and play it back again to see if 580 mV is obtained.

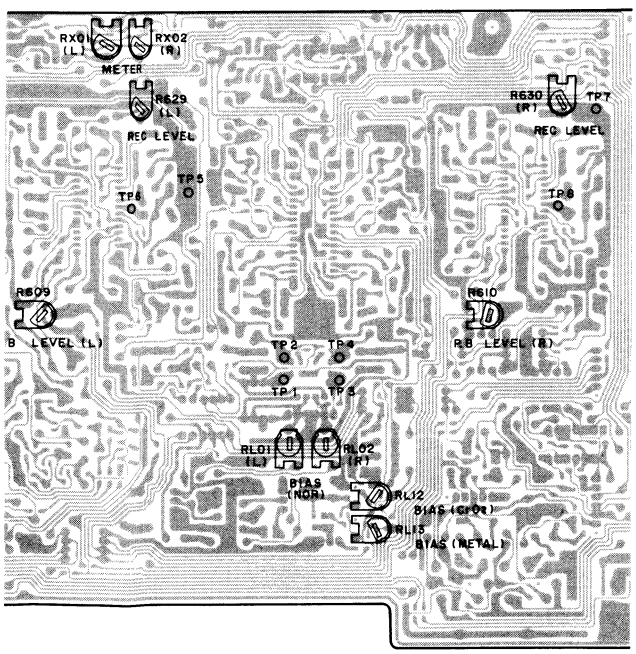

8.5 PLAYBACK OUTPUT LEVEL ADJUSTMENT (dbx)

(SD630 only)

Adjusting and measuring conditions
1. Use test tape MTT-150.
2. Set the TAPE SELECT switch to the NORMAL position.
3. Set the NR switch to the dbx TAPE position.

Procedure
1. Play back the MTT-150. Adjust R745 (L) and R746 (R) so that 763 mV is obtained in the output of LINE OUT.
2. To check adjustment, rewind the tape and play it back again to see if 763 mV is obtained.

P701 (dbx)

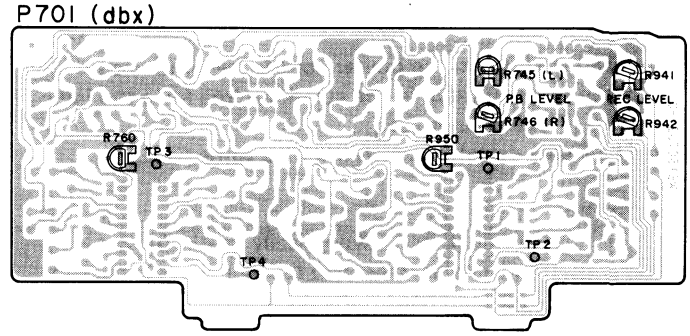

8.6 PEAK LEVEL METER ADJUSTMENT

Procedure
1. Load a recording tape and set REC PAUSE mode.
2. Apply a signal of 1kHz, −60dB to the MIC jack.
3. Connect the VTVM to the test points TP06 (L) and TP08 (R). Adjust the REC VOL so that the VTVM indicates 580mV.
4. Adjust RX01 (L) and RX02 (R) so that the peak level meter indicates 0dB.

NOTES:
1. **The meter may indicate an incorrect value if a headphone is connected to the output. Be sure to disconnect the headphone.**
2. **If a limiter is provided, the limiter switch must be turned off.**
3. **If an LED level meter is provided, take the level at the point where the LED of one higher position goes off completely.**

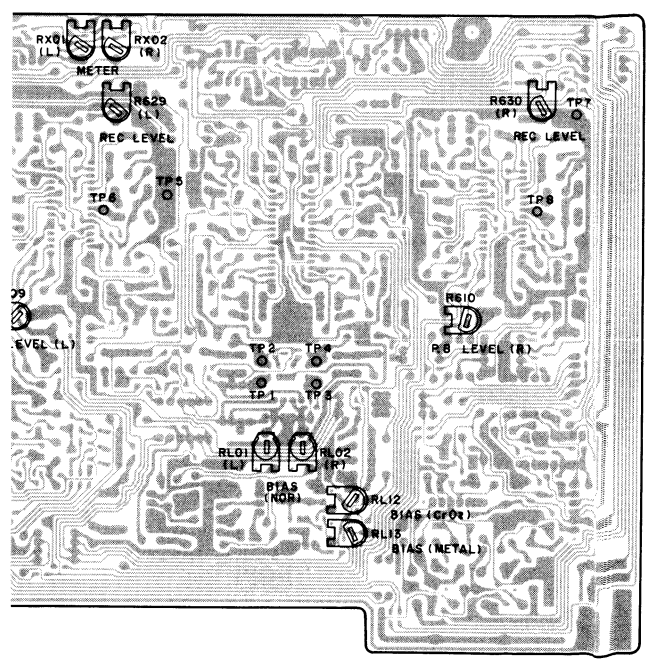

8.7 PLAYBACK NOISE MEASUREMENT

Measuring conditions
1. Use a blank tape.
2. Set the TAPE SELECT switch to the NORMAL position.
3. Set the tape speed to 4.8cm/sec.

Procedure
1. Load a blank tape (a cassette without tape and with head shielding plate) and set PLAY mode. Adjust the VOL control to maximum and minimum positions in this condition, and measure the noise (2mV or less) obtained.
2. Make the same measurement for L and R channels.

NOTES:
1. **Minimize hum in the power cord to be connected.**
2. **Make measurement in the condition free from the influence of induction noise.**
3. **The Dolby selector switch must be turned off.**

Comment: This item is additionally provided, because LED illumination is dynamically made from μ-com and a noise may enter the amplifier by the wires straying after troubleshooting.

8.8 MPX FILTER MEASUREMENT

Measuring conditions
1. Use a blank tape.
2. Connect an input signal of 1kHz, −20dB to the LINE INPUT cord.
3. Turn the Dolby NR switch to the ON position.

Procedure
1. Load a blank tape, and set REC mode.
2. Adjust the REC VOL control with the signal of LINE INPUT (1kHz, −20dB) so that the VU meter indicates OVU.
3. Adjust the ouput obtained to 0dB.
4. Change the input frequency to 19kHz ±10Hz, and make sure that the following standard is satisfied.
5. If the standard is not satisfied, adjust L601 (L) and L602 (R) to make 19kHz as small as possible.

NOTE:
1. **19kHz ±10Hz shuld be acuurately obtained using a frequency counter.**

Standard
19kHz should be−30dB or more in reference to 1kHz (−40dB or more if an optimum adjustment is made.)

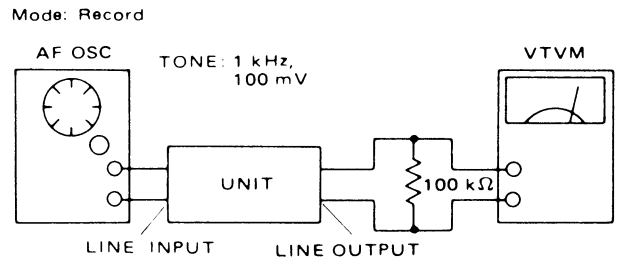

8.9 RECORD/PLAYBACK FREQUENCY RESPONSE ADJUSTMENT AND MEASUREMENT (NORMAL)

Adjusting/measuring conditions

1. Apply an input signal of 22dB 1kHz, 10kHz, 12.5kHz or maximum specification frequency.
2. Use test tape AC-212.
3. Set the tape speed to 4.8cm/sec. (LINE OUT 350mV)

Procedure

1. Set the unit to the specified recording mode. Reduce the input level by 22dB with the attenuator. Record signals of 1kHz and 10kHz on the non-recorded portion of the tape. (Dolby-C position)
2. Rewind the tape and play it back. Adjust the bias semifixed resistors RLO1 (L) and RL02 (R) so that the response at 1kHz and 10kHz is 0 ~ +1.0dB.
3. After adjustment, record and play back signals of 1kHz, 10kHz and 12.5kHz. Make sure that the level difference between these frequencies meets the following specification.
4. Set the Dobly NR switch to the B position. Record and play back signals of 1kHz and 12.5kHz.
   The level difference between these frequencies should meet the following specification.
5. Set the Dolby NR switch to the OFF position. Record and play back signals of 1kHz and 12.5kHz.
   The level difference between these frequencies should meet the following specification.
6. Make sure that the channel balance between L and R is within 3dB at 10kHz with the Doby swithc OFF.
7. Set to the "dbx TAPE" position. Record and play back signals of 1kHz and 12.5kHz. The level difference obtained then should meet the following specification.(SD630only)

NOTE: Compare the level of the 1kHz signal with the MONITOR at Dolby-C. If the level difference is 1dB or more, adjust R529 (L) and R530 (R) so that the recording level is within 1dB beforehand.

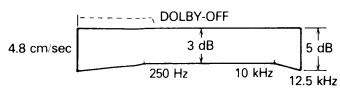

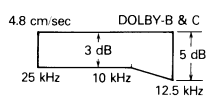

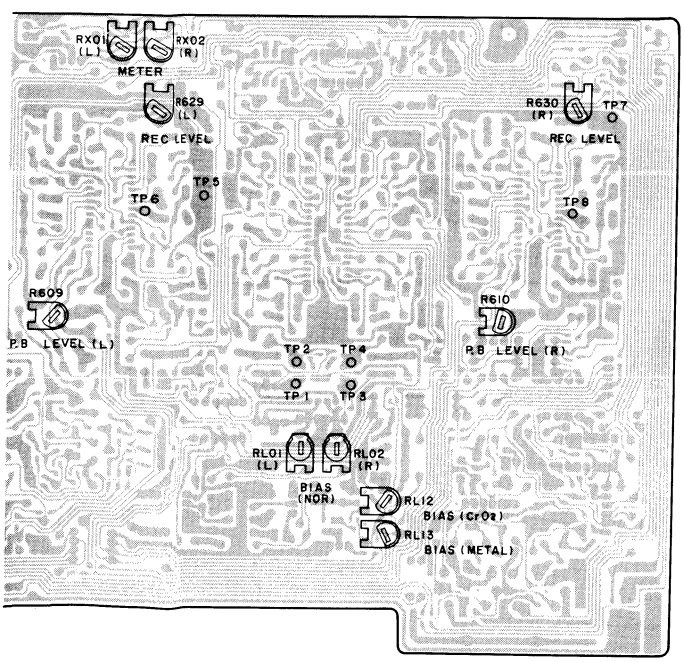

8.10 RECORD/PLAYBACK FREQUENCY RESPONSE ADJUSTMENT AND MEASUREMENT (CrO_2)

Adjusting/measuring conditions

1. Apply an input signal of 22dB 1kHz, 10kH, 12.5kH or maximum specification frequency.
2. Use test tape AC-512.
3. Set the tape speed to 4.8cm/sec. (LINE OUT 350mV)

Procedure

1. Set the unit to the specified recording mode. Reduce the input level by 22dB with the attenuator. Record signals of 1kHz and 12.5kHz (Dolby-C position)
2. Rewind the tape and play it back. Adjust the bias semifixed resistor RL12 (CrO_2).
3. After adjustment, record and play back signals of 1kHz, 10kHz and 12.5kHz. Make sure that the level difference between these frequencies meets the following specification.
4. Set the Dolby NR switch to the B position. Record and play back signals of 1kHz and 15kHz.
   The level difference between these frequencies should meet the following specification.
5. Set the Dolby NR switch to the OFF position. Record and play back signals of 1kHz and 15kHz. The level difference between these frequencies should meet the following specification.
   (SD630 only) Set to the "dbx TAPE" position. Record and play back signals of 1kHz and 12.5kHz. The level difference obtained should meet the following specification.
6. Make sure that the channel balance between L and R is within 3dB at 10kHz with the Dolby switch OFF.

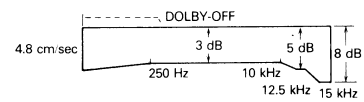

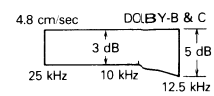

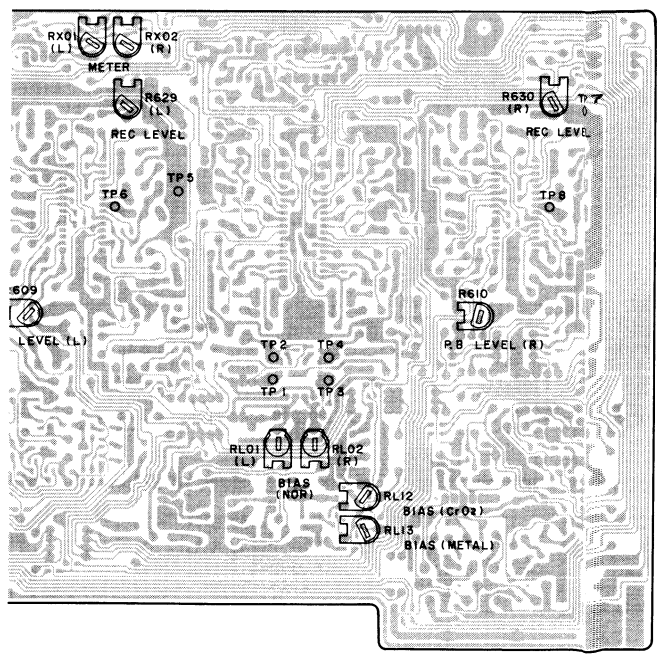

8.11 RECORD/PLAYBACK FREQUENCY RESPONSE ADJUSTMENT AND MEASUREMENT (METAL)

Adjusting/measuring conditions

1. Apply an input signal of 22dB 1kHz, 10kHz, 12.5kHz and maximum specification frequency.
2. Use test tape AC-711.
3. Set the tape speed to 4.8cm/sec. (LINE OUT 350mV)

Procedure

1. Set the unit to the specified recording mode. Reduce the input level by 22dB with the attenuator. Record signals of 1kHz and 12.5 kHz. (Dolby-C position)
2. Rewind the tape and play it back. Adjust the bias semi-fixed resistor RL13 (METAL).
3. After adjustment, record and play back signals of 1kHz, 10kHz and 12.5kHz. Make sure that the level difference between these frequencies meets the following specification.
4. Set the Dolby NR swithc to the B position. Record and play back signals of 1kHz and 12.5kHz. Make sure that the level difference between these frequencies meets the following specification.
5. Set the Dolby NR switch to the OFF position. Record and playback signals of 1kHz and 16kHz. The level difference betweent hese frequencies should meet the following specification.
   (SD630 only) Set to the "dbx TAPE" position. Record and play back signals of 1kHz and 12.5kHz. The level difference between these frequencies should meet the following specification.
6. Make sure that the channel balance between L and R is within 3dB at 10kHz with the Dolby switch OFF.

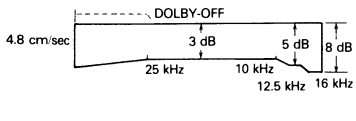

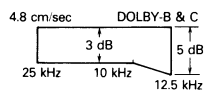

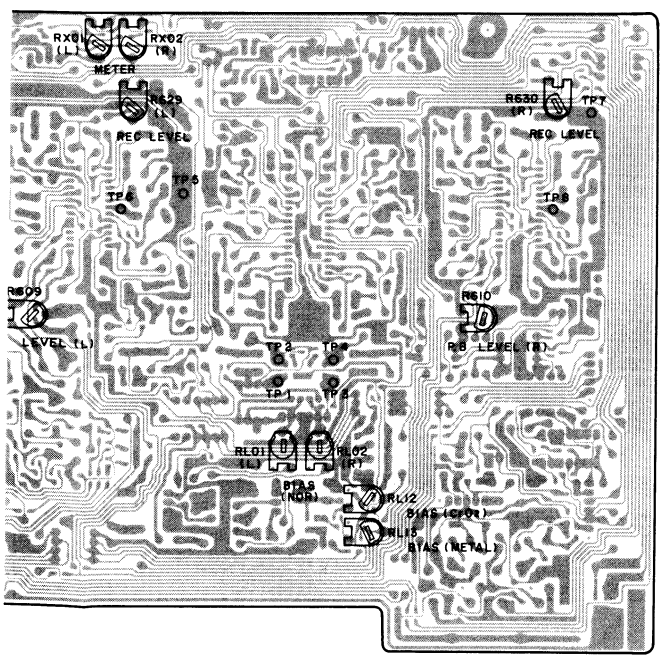

8.12 dbx LEVEL ADJUSTMENT

1. After performing 1–4 above, set the NR switch to dbx ON and record the tape at NORMAL position. Playback the recorded tape and adjust R941 (L) and R942 (R) so that the playback level is the same as the monitor level.
2. Carry out the same procedure for CrO_2 and METAL positions and adjust so that the playback levels are as shown below.
3. Check that the playback levels in the reverse direction are as specified.

NOTE: Adjust the dbx level after completing other adjustments.

P701 (dbx)

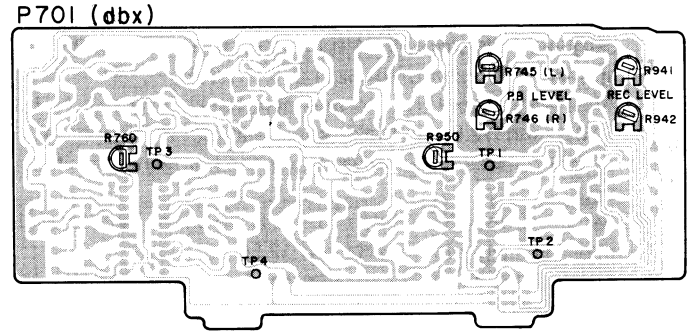

8.13 dbx CIRCUIT TIMING CURRENT ADJUSTMENT

Measuring condition

1. Input : Line input 100 mV/1 kHz
2. NR switch : dbx–DISC

Procedure

1. Adjust REL LEVEL (RJ67) so that the output voltage at pins 8 and 15 of Q905 is 20 mV.
2. Adjust R950 so that the DC voltage between PT-1 and PT-2 is 15 mV.
3. Adjust R760 so that the DC voltage between PT-3 and PT-4 is 15 mV.

P701 (dbx)

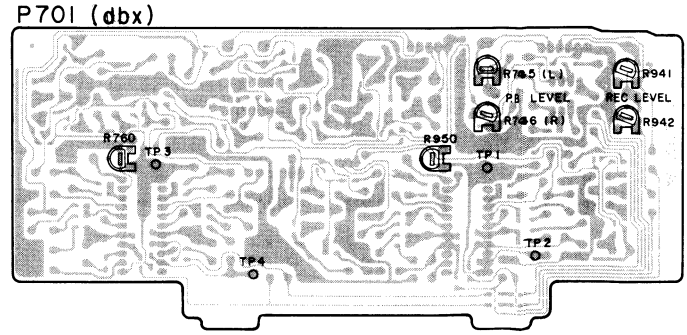

8.14 RECORD/PLAYBACK LEVEL ADJUSTMENT AND MEASUREMENT

Adjusting/measuring conditons

1. Use test tapes AC-212 and AC-512. (AC-711)
2. Set the tape speed to 4.8cm/sec. (LINE OUT 350mV)

Procedure

1. Set the TAPE SELECT switch to the NORMAL position. Set the unit to the specified recording mode.
2. Rewind the tape and play it back. Adjust R629 (L) and R630 (R) so that the recording level is the same as the monitor level.
3. Make the same procedure for CrO_2 and METAL positions.

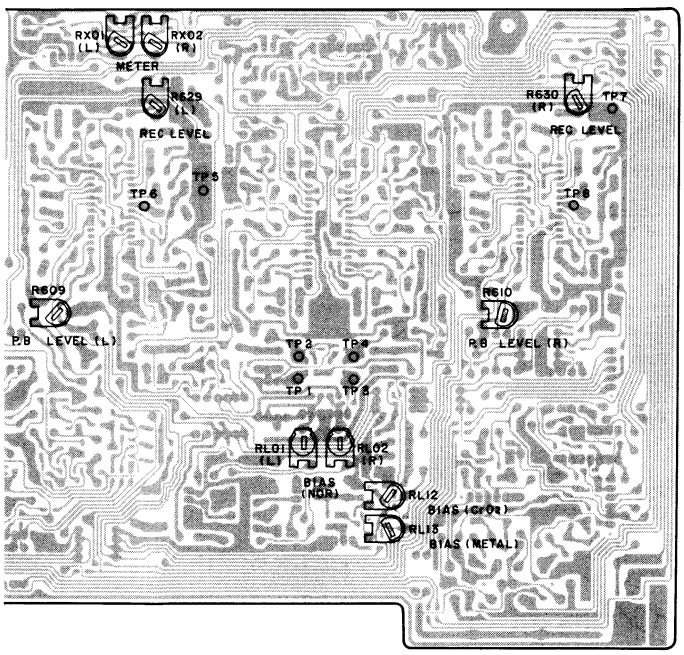

9. VOLTAGE CONVERSION

To convert the unit to a different power source voltage, change the position as illustrated in the drawing below.

CAUTION: DISCONNECT POWER SUPPLY CORD FROM AC OUTLET BEFORE CONVERTING VOLTAGE. DO NOT DISASSEMBLE THE VOLTAGE SELECTOR ABSOLUTELY.

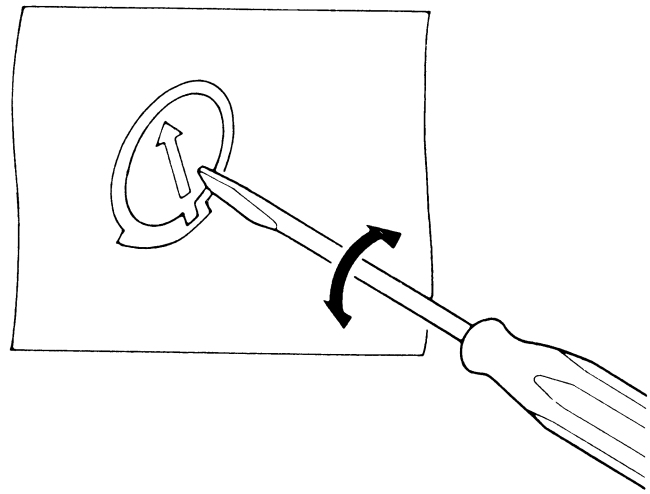

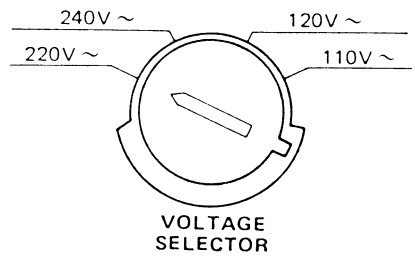

NOTE ON SAFETY:
SYMBOL ⚠ FIRE OR ELECTRICAL SHOCK HAZARD. ONLY ORIGINAL PARTS SHOULD BE USED TO REPLACE ANY PART MARKED WITH SYMBOL ⚠. ANY OTHER COMPONENT SUBSTITUTION (OTHER THAN ORIGINAL TYPE), MAY INCREASE RISK OF FIRE OR ELECTRICAL SHOCK HAZARD.

10. DIAGRAMS

10.1 LEVEL DIAGRAMS

RECORDING MODE

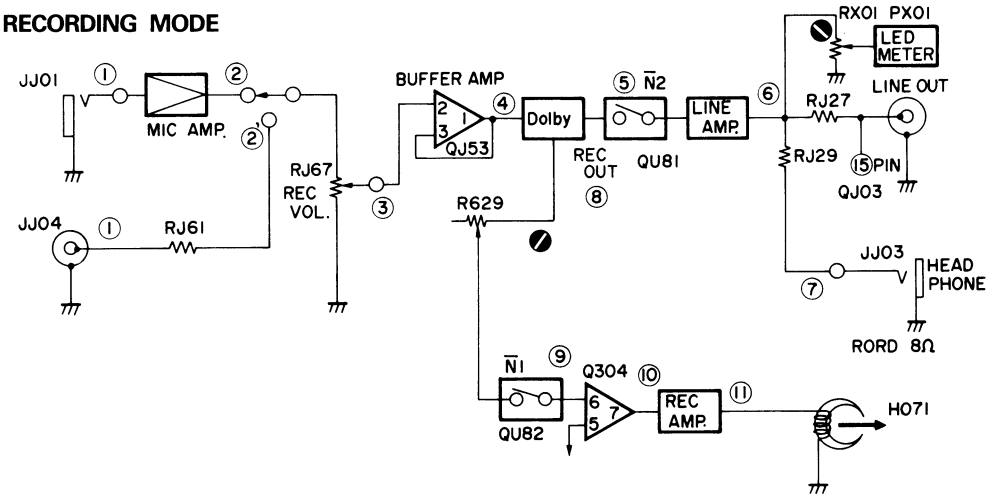

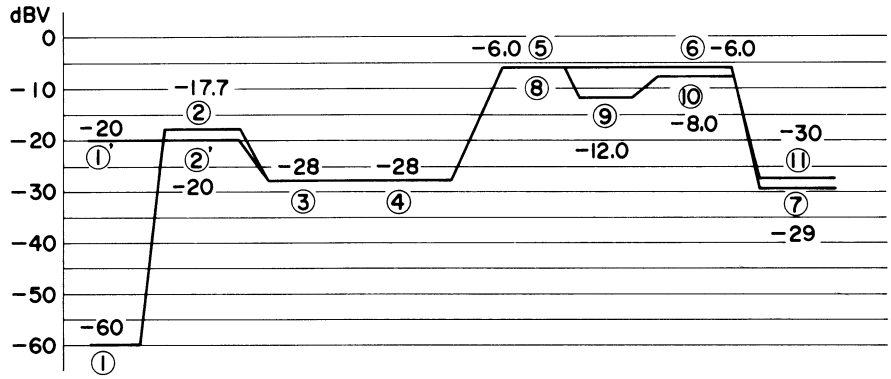

PLAYBACK MODE

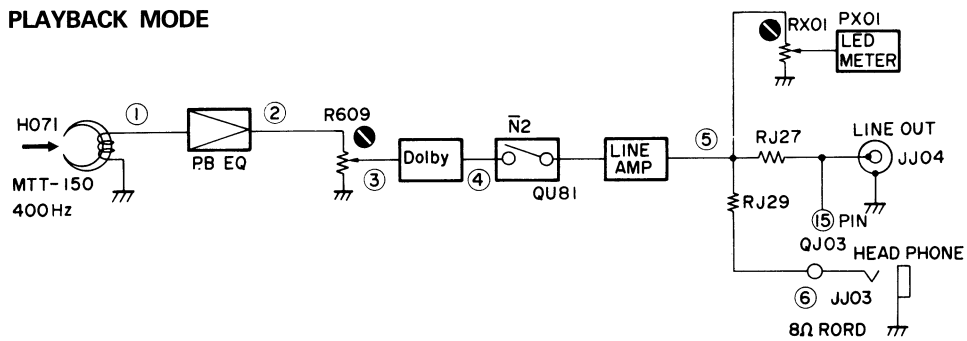

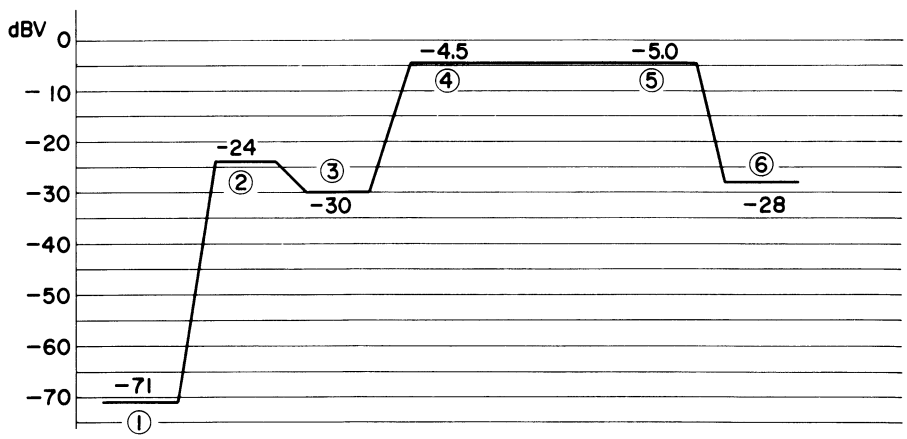

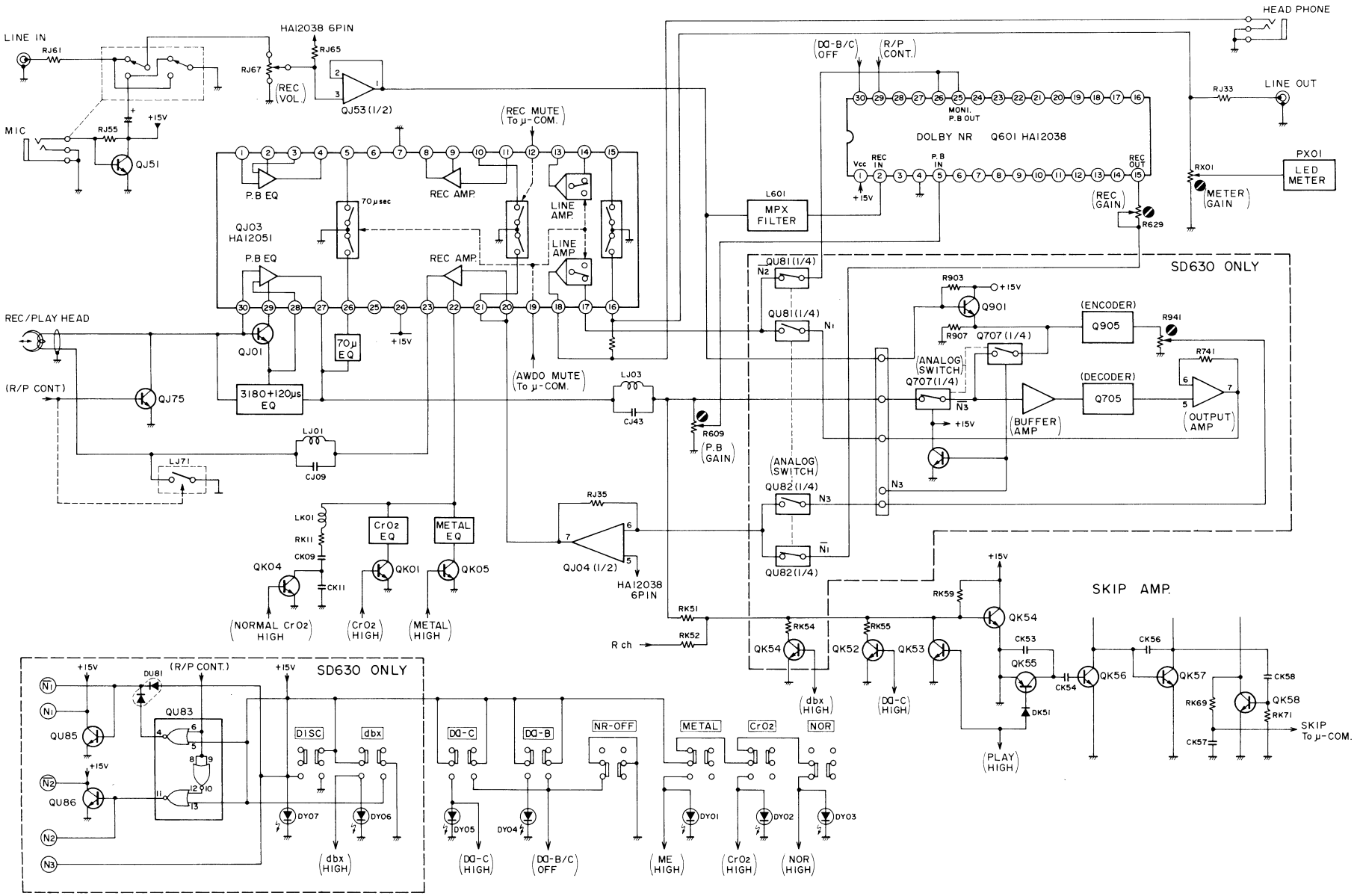
LINE IN
RJ61
HA12038 6PIN
RJ65
RJ67
(REC VOL.)
QJ53(1/2)
MIC
RJ55
+15V
QJ51
(REC MUTE To μ-COM.)
P.B EQ
70μsec
REC AMP.
LINE AMP.
QJ03 HA12051
REC/PLAY HEAD
QJ01
70μ EQ
(R/P CONT)
QJ75
3180+120μs EQ
(AWDO MUTE To μ-COM.)
LJ03
CJ43
R609
(P.B GAIN)
LJ01
CJ09
LJ71
LK01
RK11
CK09
CK11
QK04
CrO2 EQ
QK01
METAL EQ
QK05
(NORMAL CrO2 HIGH)
(CrO2 HIGH)
(METAL HIGH)
RJ35
QJ04(1/2)
HA12038 6PIN
R ch
RK51
RK52
HEAD PHONE
LINE OUT
RJ33
(DO-B/C OFF)
(R/P CONT.)
MONI. P.B OUT
DOLBY NR Q601 HA12038
Vcc
REC IN
P.B IN
REC OUT
+15V
PX01
LED METER
RX01
(METER GAIN)
(REC GAIN)
R629
L601
MPX FILTER
SD630 ONLY
QU81(1/4)
N2
N1
R903
Q901
(ENCODER)
Q905
R941
R907
Q707(1/4)
(ANALOG SWITCH)
Q707(1/4)
N3
(DECODER)
Q705
R741
(BUFFER AMP)
(OUTPUT AMP)
QU82(1/4)
SKIP AMP.
RK59
QK54
QK52
QK53
RK54
RK55
CK53
QK55
DK51
CK54
QK56
CK56
QK57
CK58
QK58
RK69
RK71
CK57
SKIP To μ-COM.
(dbx HIGH)
(DO-C HIGH)
(PLAY HIGH)
SD630 ONLY
(R/P CONT.)
DU81
QU83
QU85
QU86
DISC
dbx
DY07
DY06
(dbx HIGH)
DO-C
DO-B
NR-OFF
METAL
CrO2
NOR
DY05
DY04
DY01
DY02
DY03
(DO-C HIGH)
(DO-B/C OFF)
(ME HIGH)
(CrO2 HIGH)
(NOR HIGH)

10.3 WIRING DIAGRAMS

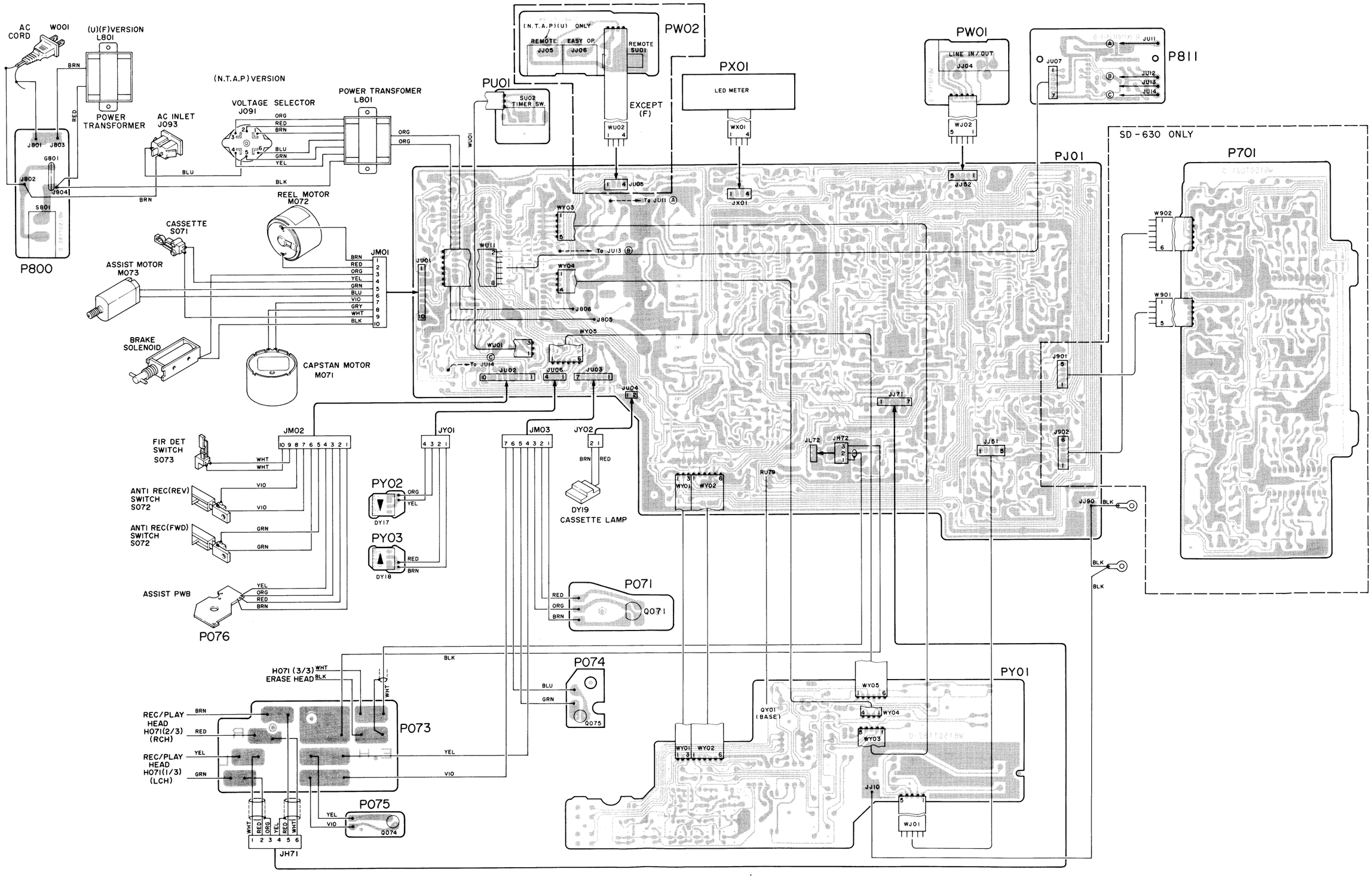

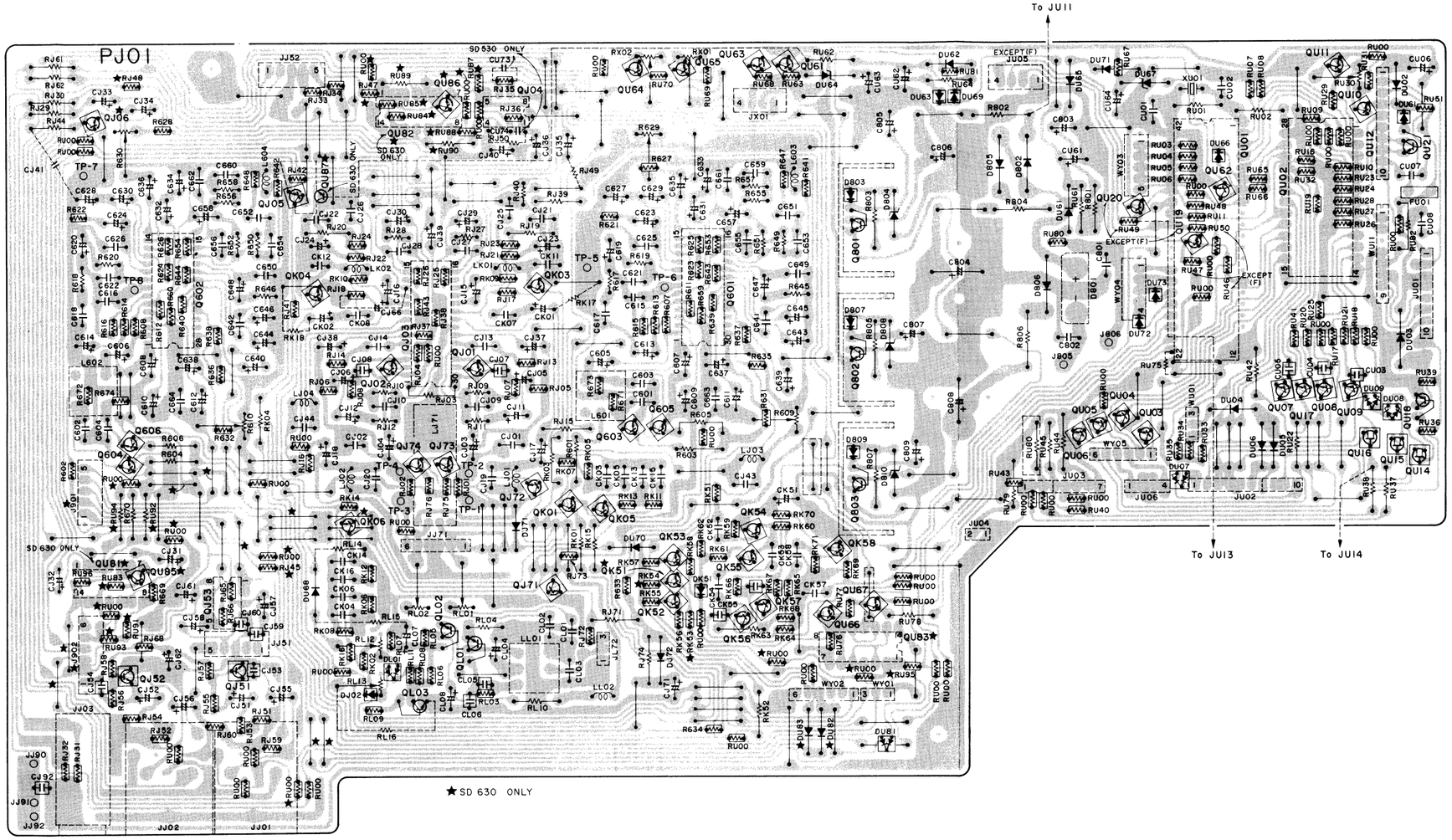
PJ01
To JU11
To JU13
To JU14
SD 630 ONLY
EXCEPT(F)

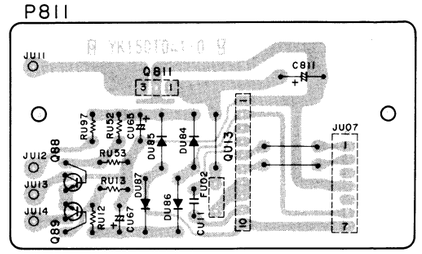
P811

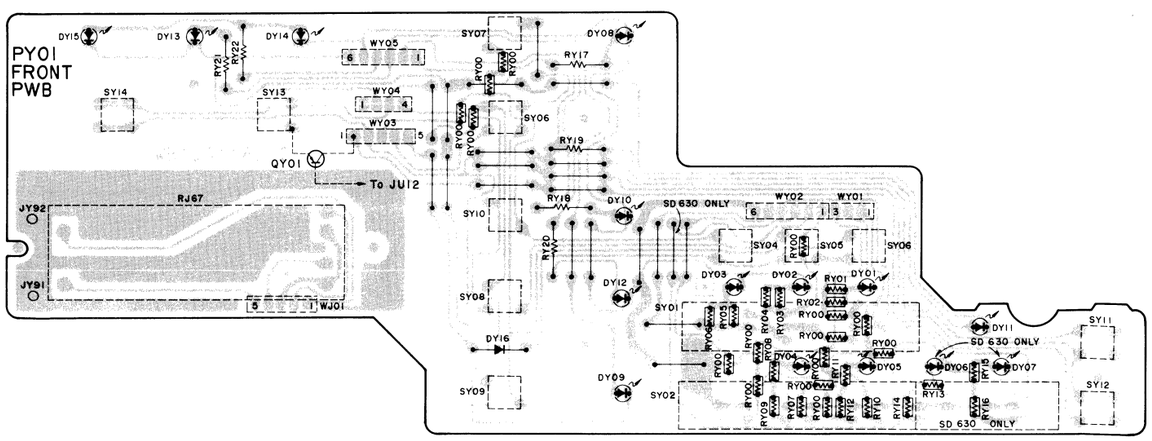
PY01
FRONT
PWB
To JU12
SD 630 ONLY

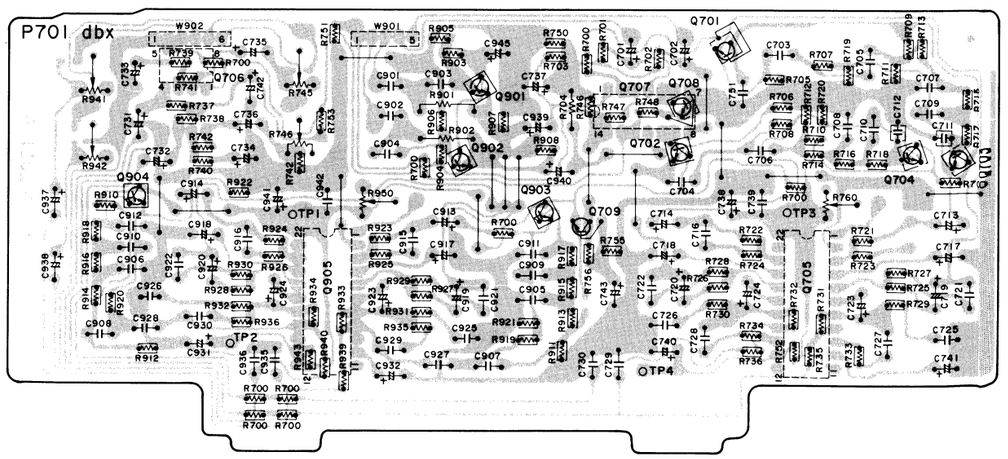
P701 dbx

10.3 WIRING DIAGRAMS

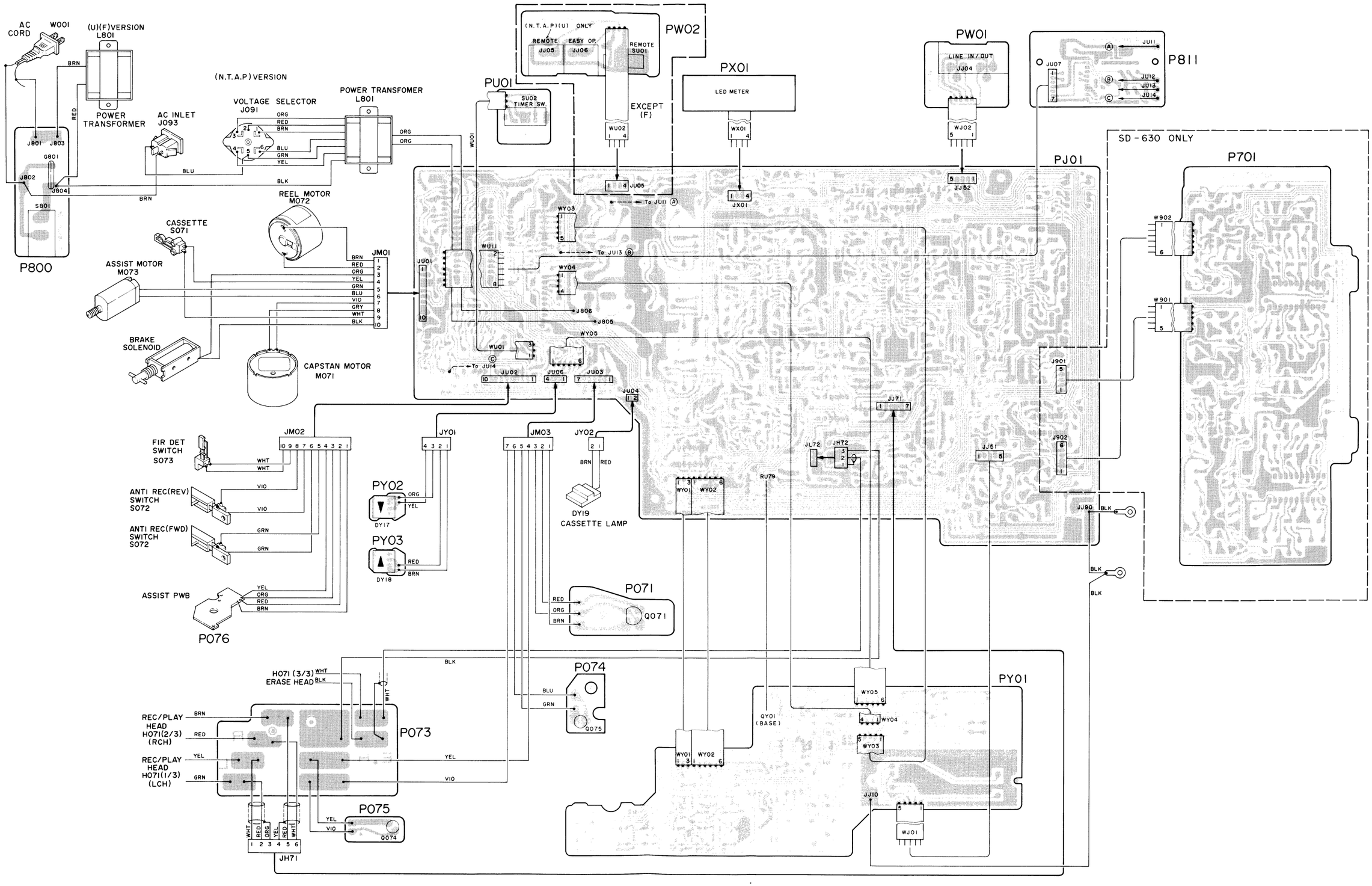

11. EXPLODED VIEWS AND PARTS LIST

[C01-99] FRONT PANEL

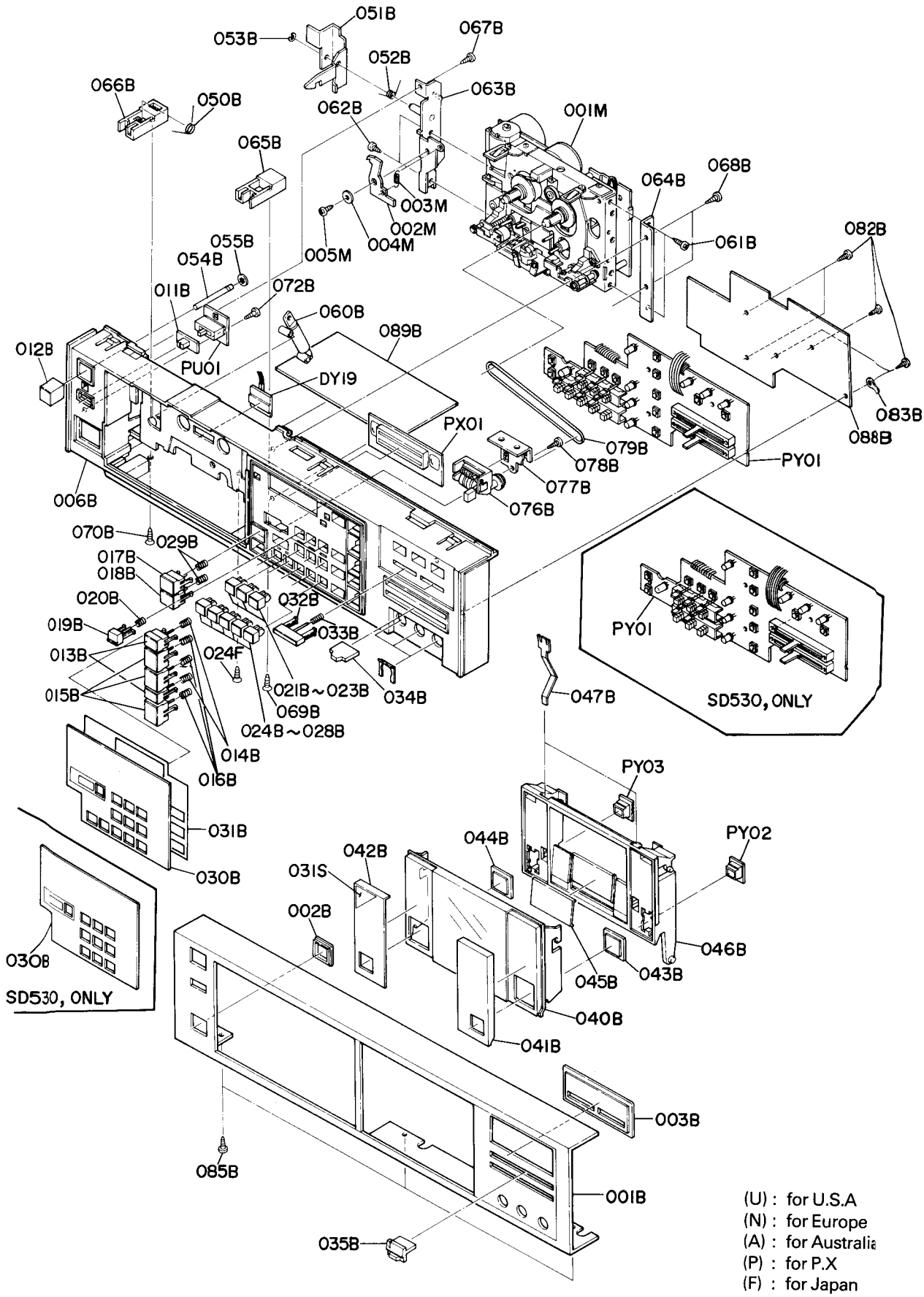

(U) : for U.S.A
(N) : for Europe
(A) : for Australia
(P) : for P.X
(F) : for Japan

REF DESIG.	Q'TY U	N	A	P	F	PART NO.	DESCRIPTION
							SD630, ONLY
A	1	1	1	1		150T063400	Front Panel Assembly
001B	1	1	1	1		150T063010	Escutcheon, Front Panel
002B	1	1	1	1		415H259210	Bushing, Power Switch
003B	1	1	1	1		150T158030	Window, Reverse Mode
							SD530, ONLY
A	1	1	1	1		148T063400	Front Panel, Assembly
001B	1	1	1	1		148T063010	Escutcheon, Front Panel
002B	1	1	1	1		415H259210	Bushing, Power Switch
003B	1	1	1	1		150T158030	Window, Reverse Mode
006B	1	1	1	1		150T105010	Chassis, Front Mold
011B	1	1	1	1		128T154020	Knob, Timer Standby
012B	1	1	1	1		415H154210	Knob, Eject
013B	2	2	2	2		420H154210	Knob, FF/REW
014B	2	2	2	2	2	403H115010	Spring
015B	3	3	3	3		416H154220	Knob, Stop/Play/Pause
016B	3	3	3	3	3	403H115010	Spring
017B	1	1	1	1		420H154310	Knob, Rec
018B	1	1	1	1		420H154320	Knob, Rec Mute
019B	3	3	3	3		141T154010	Knob
020B	3	3	3	3	3	403H115010	Spring
021B	1	1	1	1		241H154140	Knob, Metal
022B	1	1	1	1		241H154150	Knob, CrO_2
023B	1	1	1	1		241H154160	Knob, Normal
024B	1	1	1	1		241H154170	Knob, NR OFF
025B	1	1	1	1		241H154180	Knob, Dolby B
026B	1	1	1	1		241H154190	Knob, Dolby C
027B	1	1	1	1		241H154200	Knob, DBX Tape (SD630)
028B	1	1	1	1		241H154210	Knob, DBX Disc (SD630)
029B	2	2	2	2	2	403H115010	Spring
030B	1	1	1	1		150T158010	Window, Display (SD630)
030B	1	1	1	1		148T158010	Window, Display (SD530)
031B	1	1	1	1	1	150T122010	Sticker
032B	2	2	2	2		431H154010	Knob, Direction/Reverse
033B	2	2	2	2	2	132T115010	Spring
034B	1	1	1	1		140T154010	Knob, Rec Level (R)
035B	1	1	1	1		140T154020	Knob, Rec Level (L)
040B	1	1	1	1		150T158020	Window, Cassette Door(SD630)
040B	1	1	1	1		148T158020	Window, Cassette Door(SD530)
041B	1	1	1	1		150T053020	Cover, (L)
042B	1	1	1	1		150T053030	Cover, (R)
043B	1	1	1	1		150T068020	Certificate, FWD
044B	1	1	1	1		150T068020	Certificate, REV
045B	1	1	1	1		150T053010	Cover, Cassette
046B	1	1	1	1		150T271010	Holder, Cassette
047B	2	2	2	2	2	150T115010	Spring, Cassette
050B	1	1	1	1	1	124T115020	Spring, Door Open
051B	1	1	1	1	1	150T258010	Hook, Eject
052B	1	1	1	1	1	150T115020	Spring
053B	1	1	1	1	1	64002500R0	RG Ring, E Type
054B	1	1	1	1	1	150T254010	Pin, Eject
055B	1	1	1	1	1	64020300Q0	RG Ring, CS Type
060B	1	1	1	1	1	128T276010	Piston, Dumper
061B	2	2	2	2	2	51282605B0	B.H. Tapped Screw B2.6 x 5
062B	2	2	2	2	2	51282605B0	B.H. Tapped Screw B2.6 x 5
063B	1	1	1	1	1	150T104010	Retainer, (L)
064B	1	1	1	1	1	150T104020	Retainer, (R)
065B	1	1	1	1	1	150T104030	Retainer, (R)
066B	1	1	1	1	1	150T104040	Retainer, (L)
067B	1	1	1	1	1	51280310B0	B.H. Tapped Screw B3 x 10

REF. DESIG.	Q'TY U	N	A	P	F	PART NO.	DESCRIPTION
068B	2	2	2	2	2	51280310B0	B.H. Tapped Screw B3 x 10
069B	1	1	1	1	1	51500308B0	F.H. Tapped Screw F3 x 8
070B	1	1	1	1	1	51500308B0	F.H. Tapped Screw F3 x 8
072B	1	1	1	1	1	51280308B0	B.H. Tapped Screw B3 x 8
076B	1	1	1	1	1	150T052010	Counter
077B	1	1	1	1	1	150T104050	Retainer, Holder
078B	1	1	1	1	1	51282606B0	B.H. Tapped Screw B2.6 x 6
079B	1	1	1	1	1	129T264010	Belt, Counter
082B	5	5	5	5	5	51282606B0	B.H. Tapped Screw B2.6 x 6
083B	1	1	1	1	1	62030049W0	Lug
085B	3	3	3	3	3	51280308B0	B.H. Tapped Screw B3 x 8
088B	1	1	1	1	1	150T109010	Shield, PWB
089B	1	1	1	1	1	150T109020	Shield, Mecha
024F	1	1	1	1	1	51500308B0	F.H. Tapped Screw F3 x 8
001M	1	1	1	1	1	318Y304010	Mechanism, YCM652-001
002M	1	1	1	1	1	150T354010	Lever, Eject Stop
003M	1	1	1	1	1	150T115030	Spring
004M	1	1	1	1	1	150T055010	Collar
005M	1	1	1	1	1	51100305A9	B.H.M. Screw B3 x 5
031S	1					113T861010	Label, 2 Year
DY19	1	1	1	1	1	HI10009210	L.E.D. LD702UU
PX01	1	1	1	1	1	HI10801320	L.E.D. Meter, LT-1056
							SD630, ONLY (Black)
A1					1	150T063410	Front Panel Assembly
001B					1	150T063110	Escutcheon, Front Panel
002B					1	415H259210	Bushing, Power Switch
003B					1	150T158130	Window, Reverse Mode
006B					1	150T105110	Chassis, Front Mold
011B					1	128T154120	Knob, Timer
012B					1	415H154310	Knob, Eject
013B					2	420H154330	Knob, FF/REW
015B					3	416H154420	Knob, Stop/Play/Pause
017B					1	420H154340	Knob, Rec
018B					1	420H154350	Knob, Rec Mute
019B					3	141T154210	Knob
021B					1	241H154220	Knob, Metal
022B					1	241H154230	Knob, CrO_2
023B					1	241H154240	Knob, Normal
024B					1	241H154250	Knob, NR OFF
025B					1	241H154260	Knob, Dolby B
026B					1	241H154270	Knob, Dolby C
027B					1	241H154280	Knob, DBX Tape
028B					1	241H154290	Knob, DBX Disc
030B					1	150T158110	Window, Display
032B					2	431H154110	Knob, Direction/Reverse
034B					1	140T154110	Knob, Rec Level (R)
035B					1	140T154120	Knob, Rec Level (L)
040B					1	150T158120	Window, Cassette Door
041B					1	150T053120	Cover, (L)
042B					1	150T053130	Cover, (R)
043B					1	150T068120	Certificate, FWD
044B					1	150T068110	Certificate, REW
045B					1	150T053110	Cover, Cassette
046B					1	150T271110	Holder, Cassette

[C02-99] LID (TOP & BOTTOM COVER)

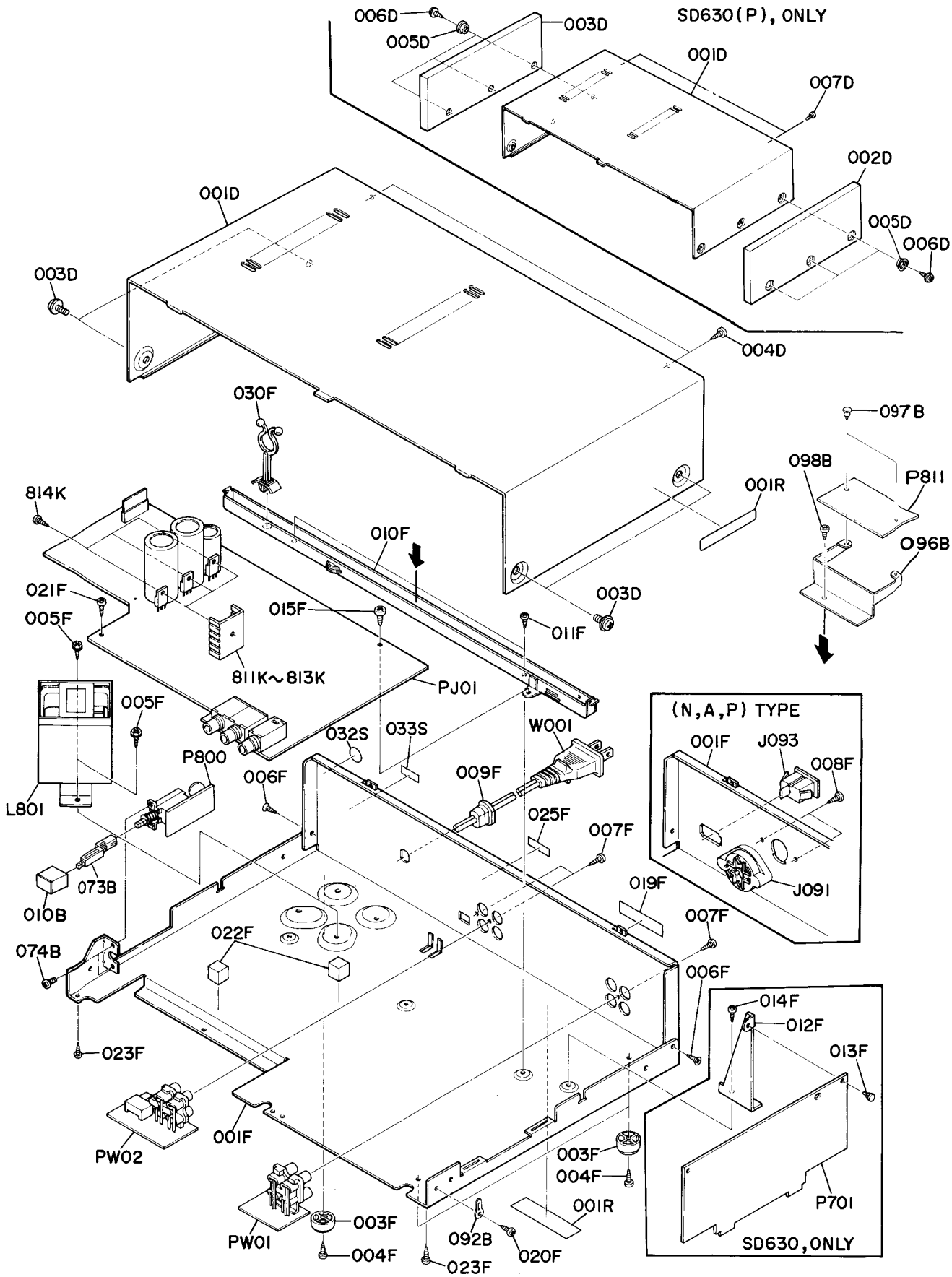

REF. DESIG.	Q'TY U	N	A	P	F	PART NO.	DESCRIPTION
010B	1	1	1	1		415H154210	Knob, Power Switch
073B	1	1	1	1	1	150T125010	Joint
074B	2	2	2	2	2	51100308B9	B.H.M. Screw B3 x 8
092B	1	1	1	1	1	62030029W0	Lug
096B	1	1	1	1	1	150T160100	Bracket, Assist P.W. Board
097B	2	2	2	2	2	2276005050	Clamper
098B	1	1	1	1	1	51280308B0	B.H. Tapped Screw B3 x 8
001D	1	1	1	1		150T257020	Lid, Top Cover
001D				1		150T257120	Lid, Top Cover (SD630PX)
002D				1		150T064010	Case, Wood; (R) (SD630PX)
003D	4					51260408Z0	B.T. Screw B4 x 8
003D		4	4	4		51260408U0	B.T. Screw B4 x 8
003D				1		150T064020	Case, Wood; (L) (SD630)
004D	2					51280308B0	B.H. Tapped Screw B3 x 8
004D		2	2	2	2	51280308U0	B.H. Tapped Screw B3 x 8
005D				6		3906259010	Bushing (SD630)
006D				6		51280420U0	B.H. Tapped Screw B4 x 20 (SD630)
007D				2		51280308B0	B.H. Tapped Screw B3 x 8 (SD630)
001F	1					150T105040	Chassis, Main (SD630)
001F	1					148T105040	Chassis, Main (SD530)
001F		1	1	1		150T105020	Chassis, Main (SD630)
001F		1	1	1		148T105020	Chassis, Main (SD530)
001F					1	150T105030	Chassis, Main (SD630)
003F	3	3	3	3	3	129T057010	Leg
004F	3	3	3	3	3	51280310B0	B.H. Tapped Screw B3 x 10
005F	2	2	2	2	2	52040406A0	H. Head Bolt, S.F H4 x 6
006F	2	2	2	2	2	51500306B0	F.H. Taptite Screw F3 x 6
007F	3	3	3	3	3	51280308B0	B.H. Tapped Screw B3 x 8
008F		2	2	2		51280308B0	B.H. Tapped Screw B3 x 8
009F	1				1	1455259030	Bushing
010F	1	1	1	1	1	150T126010	Stay, Center
011F	2	2	2	2	2	51280308B0	B.H. Tapped Screw B3 x 6
012F	1	1	1	1	1	150T160010	Bracket, DBX PWB (SD630)
013F	1	1	1	1	1	2276005050	Clamper (SD630)
014F	1	1	1	1	1	51280308B0	B.H. Tapped Screw B3 x 8 (SD630)
015F	1	1	1	1	1	51280308B0	B.H. Tapped Screw B3 x 8 (SD630)
019F	1	1	1	1	1	2112265010	Indicator, Serial No.
020F	1	1	1	1	1	51280308B0	B.H. Tapped Screw B3 x 8
021F	1	1	1	1	1	51280308B0	B.H. Tapped Screw B3 x 8
022F	2	2	2	2	2	403H056010	Buffer
023F	3	3	3	3	3	51280308B0	B.H. Tapped Screw B3 x 8
025F		1	1	1		4581861010	Label, Made in Japan
030F	1	1	1	1	1	2139005010	Clamper
							SD630, ONLY (Black)
010B					1	415H154310	Knob, Power Switch
001D					1	150T257130	Lid, Top Cover
003D					4	51706009U0	Spec. Set Screw

REF. DESIG.	Q'TY U	N	A	P	F	PART NO.	DESCRIPTION
001R	2					117H861010	Label
032S	1					2457861040	Label, CSA
033S	1					9511101070	Label, UL
811K	1	1	1	1	1	202H267030	Heatsink, Q801
812K	1	1	1	1	1	202H267030	Heatsink, Q802
813K	1	1	1	1	1	202H267030	Heatsink, Q803
814K	3	3	3	3	3	51300306B0	P.H. Tapped Screw P3 x 6
⚠ J091		1	1	1		BY05080050	Voltage Selector
⚠ J093		1	1	1		YP04000580	Plug, AC Inlet
⚠ L801	1					TS15406360	Power Transformer
⚠ L801		1	1	1		TS15716060	Power Transformer
⚠ L801					1	TS15406350	Power Transformer
⚠ W001	1					YC01900070	A.C. Power Cord
⚠ W001					1	YC01800190	A.C. Power Cord

[P01-99] PARTS ASSEMBLED ON TOP OF CHASSIS

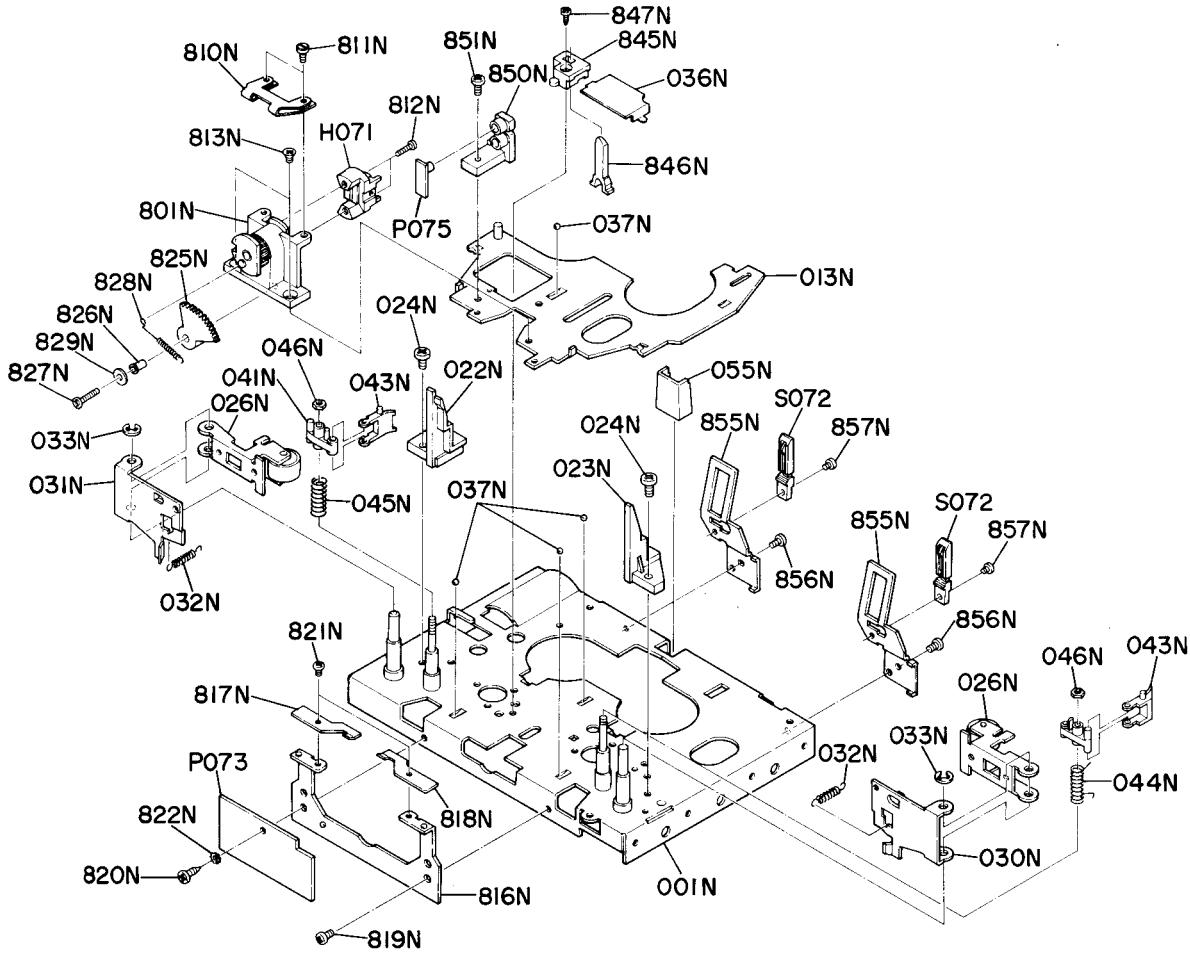

REF. DESIG.	Q'TY	PART NO.	DESCRIPTION
001N	1	318Y105700	Chassis, Main
013N	1	318Y105710	Chassis Assembly, Head
022N	1	319Y104010	Retainer, Guide; (L)
023N	1	319Y104020	Retainer, Guide; (R)
024N	2	51592605B0	B. Taptite Screw B2.6 x 5
026N	2	314Y002700	Arm Assembly, Pinch Roller
030N	1	318Y002010	Arm, Sub; (R)
031N	1	318Y002020	Arm, Sub; (L)
032N	2	318Y115020	Spring, Pinch Roller
033N	2	64002500R0	RG Ring, E Type
036N	1	314Y115060	Spring
037N	4	61025010T0	Ball
041N	1	314Y002040	Arm, Tape Guide; (L)
042N	1	314Y002020	Arm, Tape Guide; (R)
043N	2	314Y051010	Guide, Tape
044N	1	314Y115040	Spring, (R)
045N	1	314Y115050	Spring, (L)
046N	2	53110203A0	Hexagon Nut M2
055N	1	319Y067010	Cap. Cassette Guide
801N	1	318Y271700	Holder Assembly, Head
810N	1	314Y115010	Spring, Azimuth
811N	2	314Y254010	Pin, Azimuth
812N	2	51821406B0	P.H.M. Screw P1.4 x 6
813N	2	51042604A0	F.H.M. Screw F2.6 x 4

REF. DESIG.	Q'TY	PART NO	DESCRIPTION
816N	1	314Y160020	Bracket, Spring
817N	1	314Y115020	Spring, (L)
818N	1	314Y115030	Spring, (R)
819N	1	51572604B0	P. Taptite Screw P2.6 x4
820N	1	51302606B0	P.H. Tapped Screw P2.6 x6
821N	2	51100203A0	B.H.M. Screw B2 x 3
822N	1	54052600R0	T.L. Washer OR
825N	1	318Y058010	Gear, Head Turn
826N	1	314Y055010	Collar
827N	1	51100212A0	B.H.M. Screw B2 x 12
828N	1	318Y115010	Spring, Head Turn
829N	1	54020201A0	Washer, Head Turn Gear
845N	1	314Y271020	Holder, Photo Senser
846N	1	318Y355010	Lens
847N	1	51302606B0	P.H. Tapped Screw P2.6 x6
850N	1	314Y271040	Holder, Photo Senser
851N	1	51572605B0	P. Taptite Screw P2.6 x5
855N	2	319Y160030	Bracket, Anti. REC
856N	2	51572604B0	P. Taptite Screw P2.6 x4
857N	2	51100204A0	B.H.M. Screw B2 x 4
H071	1	LH52751010	Head, Rec/Play-Erase
S072	2	SM01011010	Mini Switch, Anti. REC
P073	1	YH150T1310	P.W. Board Assembly, Head Connect
P075	1	YH150T1330	P.W. Board Assembly, Rever LED

[P02-99]

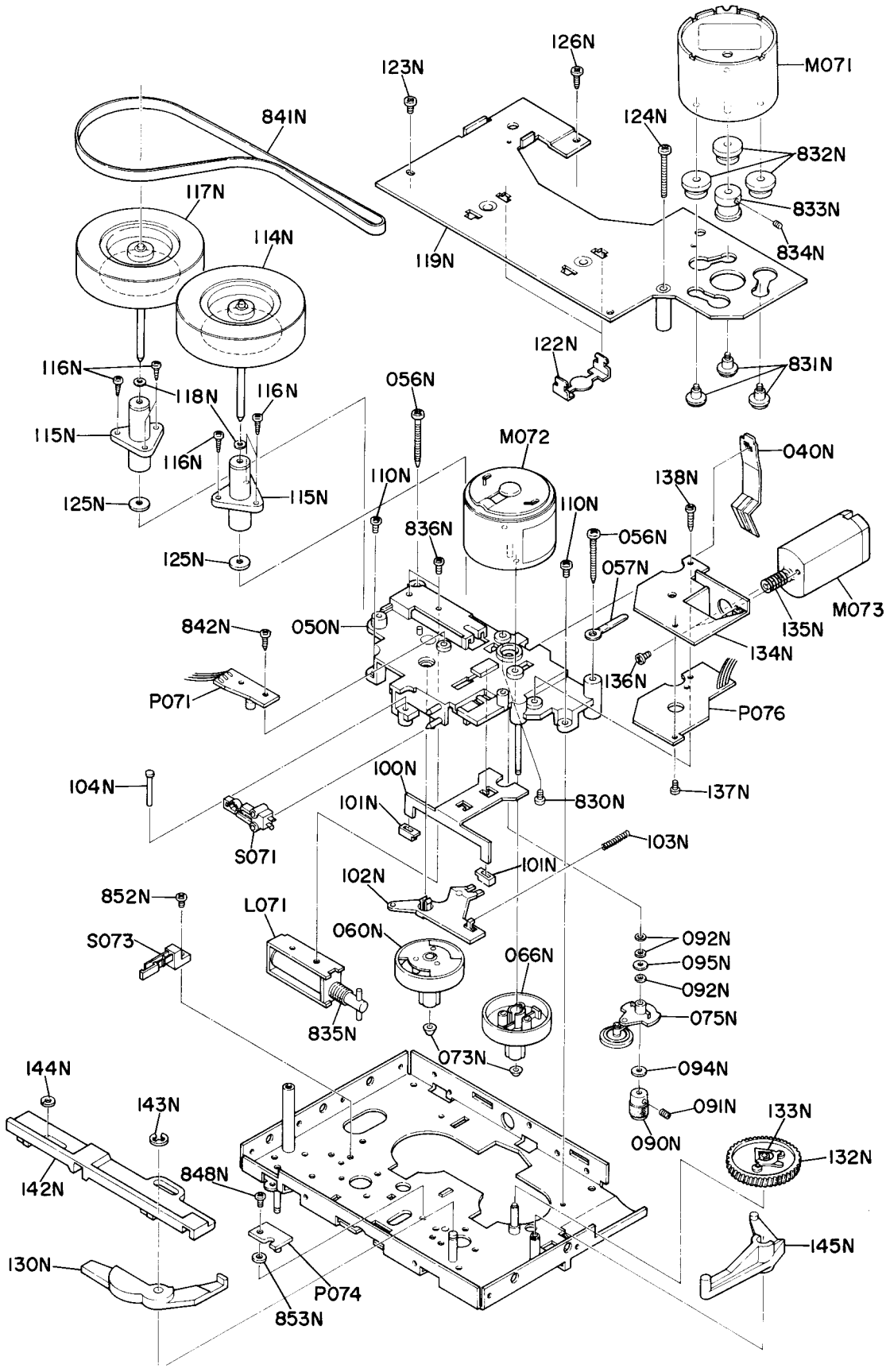
126N
123N
M071
841N
124N
832N
117N
833N
114N
834N
119N
122N
831N
116N
118N
116N
056N
115N
116N
M072
040N
110N
138N
125N
115N
110N
836N
056N
057N
125N
M073
842N
050N
135N
134N
136N
P071
P076
104N
100N
101N
830N
137N
S071
103N
101N
102N
852N
L071
060N
066N
092N
S073
095N
092N
075N
835N
073N
144N
094N
143N
091N
133N
090N
132N
142N
848N
130N
145N
P074
853N

REF. DESIG.	Q'TY	PART NO.	DESCRIPTION
040N	1	319Y115010	Spring, Cassette
050N	1	319Y160700	Bracket Assembly, Reel
056N	2	51280320B0	B.H. Tapped Screw B3 x 20
057N	1	4220005020	Clamper
060N	1	319Y004500	Table Assembly, Take-up
066N	1	319Y004510	Table Assembly, Supply
073N	2	4367067010	Cap, Reel
075N	1	313Y002520	Arm Assembly, F/R
090N	1	313Y262040	Pulley, F/R
091N	1	51692603Q0	Socket Screw, HP M2.6 x 3
092N	3	59020405G9	Washer
094N	1	59020805G9	Washer
095N	1	313Y118010	Spacer
100N	1	316Y354010	Lever, Brake
101N	2	316Y263010	Brake, Ruber
102N	1	316Y002030	Arm, Brake
103N	1	316Y115050	Spring, Brake
104N	1	319Y112030	Shaft, Cassette Switch
110N	2	51592605B0	B. Taptite Screw B2.6 x 5
114N	1	318Y273020	Flywheel Assembly, Reverse
115N	2	319Y106010	Sustainer, Capstan
116N	6	51592605B0	B. Taptite Screw B2.6 x 5
117N	1	318Y273010	Flywheel Assembly, NORMAL
118N	2	59264702G9	Washer
119N	1	319Y160710	Bracket Assembly, Motor
122N	2	319Y115020	Spring, Thrust
123N	1	51592605B0	B. Taptite Screw B2.5 x 5
124N	1	51102620A0	B.H.M. Screw B2.6 x 20
125N	2	316Y114030	Stopper, Oil Fence
126N	1	51302606B0	P.H. Tapped Screw P2.6 x 6
130N	1	316Y002040	Arm. Play
132N	1	316Y058010	Gear, Drive
133N	1	316Y123010	Contactor
134N	1	316Y160030	Bracket, Rotary Detector
135N	1	316Y058030	Gear, Worm
136N	2	51100203A0	B.H.M. Screw B2 x 3
137N	1	51100203A0	B.H.M. Screw B2 x 3
138N	1	51302608B0	P.H. Tapped Screw B2.6 x 8
142N	1	314Y354010	Lever, NOR/REV
143N	1	64000300R0	RG Ring, E Type
144N	1	318Y114010	Stopper
145N	1	314Y002010	Arm, Select

REF. DESIG.	Q'TY	PART NO.	DESCRIPTION
830N	2	51062604A0	P.H.M. Screw P2.6 x 4
831N	3	4367112150	Shaft
832N	3	313Y259010	Bushing
833N	1	316Y262010	Pully, Main Motor
834N	1	51692603Q0	Socket Screw, HP M2.6 x 3
835N	1	313Y115060	Spring, Brake Solenoid
836N	2	51442604A0	L. Washer Screw L2.6 x 4
841N	1	318Y264010	Belt, Main
842N	1	51302606B0	P.H. Tapped Screw P2.6 x 6
848N	1	51572605B0	P. Taptite Screw P2.6 x 5
852N	1	51572605B0	P. Taptite Screw P2.6 x 5
853N	1	318Y055010	Collar, Photo Senser
L071	1	ME10440040	Solenoide Coil, Brake
M071	1	MM11200220	D.C. Motor, Main
M072	1	MM00900040	D.C. Motor, F/R
M073	1	MM00900030	D.C. Motor, Assist
S071	1	SM01011000	Mini Switch, Cassette
S073	1	SM01011020	Mini Switch, Reverse
P071	1	YF150T0010	P.W. Board Assembly, Counter Photo
P074	1	YH150T1320	P.W. Board Assembly, Reverse LED
P076	1	YF139T0010	P.W. Board Assembly, Rotary Detector

[H01-99] PACKING MATERIALS

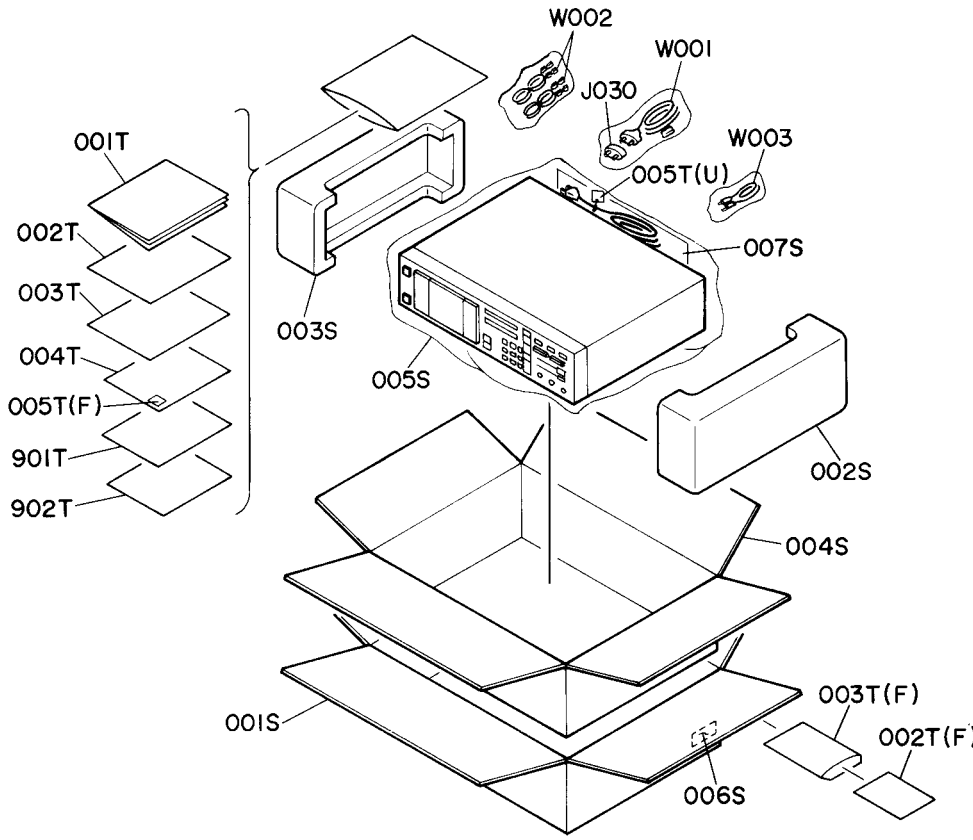

REF. DESIG.	Q'TY U	N	A	P	F	PART NO.	DESCRIPTION
001S	1					150T801020	Packing Case (SD630)
001S		1	1		1	150T801010	Packing Case (SD630)
001S				1		150T801040	Packing Case (SD630)
001S	1					148T801020	Packing Case (SD530)
001S		1	1			148T801010	Packing Case (SD530)
001S				1		148T801040	Packing Case (SD530)
002S	1	1	1	1	1	150T809030	Cushion, (R)
003S	1	1	1	1	1	150T809130	Cushion, (L)
005S	1	1	1	1	1	9090808030	Polyethylene Sheet
006S	2					9526019020	Serial No. Card
006S		4				9526019060	Serial No. Card
006S			4			9526019030	Serial No. Card
006S				4		9526019050	Serial No. Card
006S					4	9526019040	Serail No. Card
007S	1				1	2918107370	Sheet
001T	1					150T851210	Instructions
001T		1	1	1		150T851310	Instructions
001T					1	150T851110	Instructions (SD630)
002T	1					150T851220	Instructions, Spec (SD630)
002T		1	1	1		150T851320	Instructions, Spec (SD630)
002T					1	9631000130	Guarantee Card (SD630)
002T	1					148T851220	Instruction, Spec (SD530)
002T		1	1	1		148T851320	Instruction, Spec (SD530)

REF. DESIG.	Q'TY U	N	A	P	F	PART NO.	DESCRIPTION
003T	1					103H854010	Guarantee Card
003T		1				150T856010	Circuit Diagram (SD630)
003T		1				148T856010	Circuit Diagram (SD530)
003T			1			9631000090	Guarantee Card
003T				1		416H854010	Guarantee Card
003T					1	128T854010	Guarantee Card (SD630)
004T	1					2225813010	Envelope
004T				1		3435851210	Instructions
004T					1	9611000050	User's Card (SD630)
005T	1					9560000100	Hang Tag
005T					1	9540000010	License (SD630)
901T	1					2818854040	Guarantee Card, Canada
902T	1					9650000050	S. Station Card, Canada
⚠J030				1		YJ04000240	Jack, AC Adaptor
⚠W001		1				ZC01805010	A.C. Power Cord
⚠W001			1			ZC02006020	A.C. Power Cord
⚠W001				1		ZC01807010	A.C. Power Cord
W002	2	2	2	2	2	ZD01000170	Connective Cord
W003	1	1	1	1		ZD00400090	Connective Cord, Easy Bus

(U) : for U.S.A
(N) : for Europe
(A) : for Australia
(P) : for P.X
(F) : for Japan

ELECTRICAL PARTS LIST

REF. DESIG.	Q'TY U	N	A	P	F	PART NO.	DESCRIPTION
							(SD630, ONLY)
							P701-DBX
							CIRCUIT BOARD
P701	1	1	1	1	1	WA105T0010	P.W. Board, DBX
	1	1	1	1		ZZ150T0010	P.W. Board Assembly
							P701-CAPACITORS
C701	1	1	1	1	1	EA10505030	Elec. 1μF 50V
C702	1	1	1	1	1	EA10505030	Elec. 1μF 50V
C703	1	1	1	1	1	DF15104350	Film 0.1μF ±5%
C704	1	1	1	1	1	DF15104350	Film 0.1μF ±5%
C705	1	1	1	1	1	DF15104350	Film 0.1μF ±5%
C706	1	1	1	1	1	DF15104350	Film 0.1μF ±5%
C707	1	1	1	1	1	DF15332310	Film 3300pF ±5%
C708	1	1	1	1	1	DF15332310	Film 3300pF ±5%
C709	1	1	1	1	1	DF15332310	Film 3300pF ±5%
C710	1	1	1	1	1	DF15332310	Film 3300pF ±5%
C711	1	1	1	1	1	DD45331300	Ceramic 330pF ±5%, Chip
C712	1	1	1	1	1	DD45331300	Ceramic 330pF ±5%, Chip
C713	1	1	1	1	1	EA33405030	Elect 0.33μF 50V
C714	1	1	1	1	1	EA33405030	Elect 0.33μF 50V
C715	1	1	1	1	1	DF15333350	Film 0.033μF ±5%
C716	1	1	1	1	1	DF15333350	Film 0.033μF ±5%
C717	1	1	1	1	1	EA10602530	Elect 10μF 25V
C718	1	1	1	1	1	EA10602530	Elect 10μF 25V
C719	1	1	1	1	1	DF15684350	Film 0.68μF ±5%
C720	1	1	1	1	1	DF15684350	Film 0.68μF ±5%
C721	1	1	1	1	1	DF15471550	Film 470pF ±5%
C722	1	1	1	1	1	DF15471550	Film 470pF ±5%
C723	1	1	1	1	1	EV68600360	Elect 68μF 3V
C724	1	1	1	1	1	EV68600360	Elect 68μF 3V
C725	1	1	1	1	1	DF15472310	Film 4700pF ±5%
C726	1	1	1	1	1	DF15472310	Film 4700pF ±5%
C727	1	1	1	1	1	DF15223350	Film 0.022μF ±5%
C728	1	1	1	1	1	DF15223350	Film 0.022μF ±5%
C729	1	1	1	1	1	DF15472310	Film 4700pF ±5%
C730	1	1	1	1	1	DF15472310	Film 4700pF ±5%
C731	1	1	1	1	1	EA10505030	Elect 1μF 50V
C732	1	1	1	1	1	EA10505030	Elect 1μF 50V
C733	1	1	1	1	1	EA47602530	Elect 47μF 25V
C734	1	1	1	1	1	EA47602530	Elect 47μF 25V
C735	1	1	1	1	1	EA10602530	Elect 10μF 25V
C736	1	1	1	1	1	EA10602530	Elect 10μF 25V
C737	1	1	1	1	1	EA22701630	Elect 220μF 16V
C738	1	1	1	1	1	EA47601030	Elect 47μF 10V
C739	1	1	1	1	1	DK18103300	Ceramic 0.01μF
C740	1	1	1	1	1	EA10602530	Elect 10μF 25V
C741	1	1	1	1	1	EA10505030	Elect 1μF 50V
C742	1	1	1	1	1	EA22601630	Elect 22μF 16V
C743	1	1	1	1	1	EA33601630	Elect 33μF 16V
C901	1	1	1	1	1	DF15334350	Film 0.33μF ±5%
C902	1	1	1	1	1	DF15334350	Film 0.33μF ±5%
C903	1	1	1	1	1	DF15334350	Film 0.33μF ±5%
C904	1	1	1	1	1	DF15334350	Film 0.33μF ±5%
C905	1	1	1	1	1	DF15332310	Film 3300pF ±5%
C906	1	1	1	1	1	DF15332310	Film 3300pF ±5%
C907	1	1	1	1	1	DF15104350	Film 0.1μF ±5%
C908	1	1	1	1	1	DF15104350	Film 0.1μF ±5%
C909	1	1	1	1	1	DF15332310	Film 3300pF ±5%
C910	1	1	1	1	1	DF15332310	Film 3300pF ±5%
C911	1	1	1	1	1	DF15331550	Film 330pF ±5%
C912	1	1	1	1	1	DF15331550	Film 330pF ±5%
C913	1	1	1	1	1	EA33405030	Elect 0.33μF 50V
C914	1	1	1	1	1	EA33405030	Elect 0.33μF 50V
C915	1	1	1	1	1	DF15333350	Film 0.033μF ±5%
C916	1	1	1	1	1	DF15333350	Film 0.033μF ±5%
C917	1	1	1	1	1	EA10602530	Elect 10μF 25V
C918	1	1	1	1	1	EA10602530	Elect 10μF 25V
C919	1	1	1	1	1	DF15684350	Film 0.68μF ±5%
C920	1	1	1	1	1	DF15684350	Film 0.68μF ±5%
C921	1	1	1	1	1	DF15391550	Film 390pF ±5%
C922	1	1	1	1	1	DF15391550	Film 390pF ±5%
C923	1	1	1	1	1	EV68600360	Elect 68μF 3V
C924	1	1	1	1	1	EV68600360	Elect 68μF 3V
C925	1	1	1	1	1	DF15472310	Film 4700pF ±5%
C926	1	1	1	1	1	DF15472310	Film 4700pF ±5%
C927	1	1	1	1	1	DF15104350	Film 0.1μF ±5%
C928	1	1	1	1	1	DF15104350	Film 0.1μF ±5%
C929	1	1	1	1	1	DF15331550	Film 330pF ±5%
C930	1	1	1	1	1	DF15331550	Film 330pF ±5%
C931	1	1	1	1	1	EA10602530	Elect 10μF 25V
C932	1	1	1	1	1	EA10505030	Elect 1μF 50V
C935	1	1	1	1	1	DF15222310	Film 2200pF ±5%
C936	1	1	1	1	1	DF15222310	Film 2200pF ±5%
C937	1	1	1	1	1	EA10602530	Elect 10μF 25V
C938	1	1	1	1	1	EA10602530	Elect 10μF 25V
C939	1	1	1	1	1	EQ10505030	Elect 1μF 50V
C940	1	1	1	1	1	EQ10505030	Elect 1μF 50V
C941	1	1	1	1	1	EA47601030	Elect 47μF 10V
C942	1	1	1	1	1	DK18103300	Ceramic 0.01μF
C945	1	1	1	1	1	EA22601630	Elect 22μF 16V
							P701-RESISTORS
							(All Resistors are ±5% & 1/8W)
R700	9	9	9	9	9	RI05000180	0Ω, Chip
R701	1	1	1	1	1	RI05103180	10KΩ, Chip
R702	1	1	1	1	1	RI05103180	10KΩ, Chip
R703	1	1	1	1	1	RI05103180	10KΩ, Chip
R704	1	1	1	1	1	GD05103140	10KΩ
R705	1	1	1	1	1	RI05123180	12KΩ, Chip
R706	1	1	1	1	1	RI05123180	12KΩ, Chip
R707	1	1	1	1	1	RI05333180	33KΩ, Chip
R708	1	1	1	1	1	RI05333180	33KΩ, Chip
R709	1	1	1	1	1	RI05154180	150KΩ, Chip
R710	1	1	1	1	1	RI05154180	150KΩ, Chip
R711	1	1	1	1	1	RI05224180	220KΩ, Chip
R712	1	1	1	1	1	RI05224180	220KΩ, Chip
R713	1	1	1	1	1	RI05472180	4.7KΩ, Chip
R714	1	1	1	1	1	RI05472180	4.7KΩ, Chip
R715	1	1	1	1	1	RI05153180	15KΩ, Chip
R716	1	1	1	1	1	RI05153180	15KΩ, Chip
R717	1	1	1	1	1	RI05153180	15KΩ, Chip
R718	1	1	1	1	1	RI05153180	15KΩ, Chip
R719	1	1	1	1	1	RI05332180	3.3KΩ, Chip

REF. DESIG.	Q'TY U	N	A	P	F	PART NO.	DESCRIPTION
R720	1	1	1	1	1	RI05332180	3.3KΩ, Chip
R721	1	1	1	1	1	RI05103180	10KΩ, Chip
R722	1	1	1	1	1	RI05103180	10KΩ, Chip
R723	1	1	1	1	1	RI05102180	1KΩ, Chip
R724	1	1	1	1	1	RI05102180	1KΩ, Chip
R725	1	1	1	1	1	RI05153180	15KΩ, Chip
R726	1	1	1	1	1	RI05153180	15KΩ, Chip
R727	1	1	1	1	1	RI05472180	4.7KΩ, Chip
R728	1	1	1	1	1	RI05472180	4.7KΩ, Chip
R729	1	1	1	1	1	RI05151180	150Ω, Chip
R730	1	1	1	1	1	RI05151180	150Ω, Chip
R731	1	1	1	1	1	RI05153180	15KΩ, Chip
R732	1	1	1	1	1	RI05153180	15KΩ, Chip
R733	1	1	1	1	1	RI05472180	4.7KΩ, Chip
R734	1	1	1	1	1	RI05472180	4.7KΩ, Chip
R735	1	1	1	1	1	RI05122180	1.2KΩ, Chip
R736	1	1	1	1	1	RI05122180	1.2KΩ, Chip
R737	1	1	1	1	1	RI05104180	100KΩ, Chip
R738	1	1	1	1	1	RI05104180	100KΩ, Chip
R739	1	1	1	1	1	RI05122180	1.2KΩ, Chip
R740	1	1	1	1	1	RI05122180	1.2KΩ, Chip
R741	1	1	1	1	1	RI05223180	22KΩ, Chip
R742	1	1	1	1	1	RI05223180	22KΩ, Chip
R745	1	1	1	1	1	RA02030800	20KΩ(B), Trimming
R746	1	1	1	1	1	RA02030800	20KΩ(B), Trimming
R747	1	1	1	1	1	RI05473180	47KΩ, Chip
R748	1	1	1	1	1	RI05473180	47KΩ, Chip
R749	1	1	1	1	1	RI05682180	6.8KΩ, Chip
R750	1	1	1	1	1	RI05392180	3.9KΩ, Chip
R751	1	1	1	1	1	RI05333180	33KΩ, Chip
R752	1	1	1	1	1	RI05102180	1KΩ, Chip
R753	1	1	1	1	1	RI05103180	10KΩ, Chip
R754	1	1	1	1	1	RI05103180	10KΩ, Chip
R755	1	1	1	1	1	RI05332180	3.3KΩ, Chip
R756	1	1	1	1	1	RI05222180	2.2KΩ, Chip
R760	1	1	1	1	1	RA02020800	2KΩ(B), Trimming
R901	1	1	1	1	1	GD05103140	10KΩ ¼W
R902	1	1	1	1	1	GD05103140	10KΩ ¼W
R903	1	1	1	1	1	RI05563180	56KΩ, Chip
R904	1	1	1	1	1	RI05563180	56KΩ, Chip
R905	1	1	1	1	1	RI05124180	120KΩ, Chip
R906	1	1	1	1	1	RI05124180	120KΩ, Chip
R907	1	1	1	1	1	RI05332180	3.3KΩ, Chip
R908	1	1	1	1	1	RI05332180	3.3KΩ, Chip
R909	1	1	1	1	1	RI05154180	150KΩ, Chip
R910	1	1	1	1	1	RI05154180	150KΩ, Chip
R911	1	1	1	1	1	RI05224180	220KΩ, Chip
R912	1	1	1	1	1	RI05224180	220KΩ, Chip
R913	1	1	1	1	1	RI05472180	4.7KΩ, Chip
R914	1	1	1	1	1	RI05472180	4.7KΩ, Chip
R915	1	1	1	1	1	RI05153180	15KΩ, Chip
R916	1	1	1	1	1	RI05153180	15KΩ, Chip
R917	1	1	1	1	1	RI05153180	15KΩ, Chip
R918	1	1	1	1	1	RI05153180	15KΩ, Chip
R919	1	1	1	1	1	RI05333180	33KΩ, Chip
R920	1	1	1	1	1	RI05333180	33KΩ, Chip

REF. DESIG.	Q'TY U	N	A	P	F	PART NO.	DESCRIPTION
R923	1	1	1	1	1	RI05103180	10KΩ, Chip
R924	1	1	1	1	1	RI05103180	10KΩ, Chip
R925	1	1	1	1	1	RI05102180	1KΩ, Chip
R926	1	1	1	1	1	RI05102180	1KΩ, Chip
R927	1	1	1	1	1	RI05153180	15KΩ, Chip
R928	1	1	1	1	1	RI05153180	15KΩ, Chip
R929	1	1	1	1	1	RI05472180	4.7KΩ, Chip
R930	1	1	1	1	1	RI05472180	4.7KΩ, Chip
R931	1	1	1	1	1	RI05151180	150Ω, Chip
R932	1	1	1	1	1	RI05151180	150Ω, Chip
R933	1	1	1	1	1	RI05153180	15KΩ, Chip
R934	1	1	1	1	1	RI05153180	15KΩ, Chip
R935	1	1	1	1	1	RI05472180	4.7KΩ, Chip
R936	1	1	1	1	1	RI05472180	4.7KΩ, Chip
R939	1	1	1	1	1	RI05122180	1.2KΩ, Chip
R940	1	1	1	1	1	RI05122180	1.2KΩ, Chip
R941	1	1	1	1	1	RA02030800	20KΩ(B), Trimming
R942	1	1	1	1	1	RA02030800	20KΩ(B), Trimming
R943	1	1	1	1	1	RI05102180	1KΩ, Chip
R950	1	1	1	1	1	RA02020800	2KΩ(B), Trimming
							P701-SEMICONDUCTORS
Q701	1	1	1	1	1	HX327121A0	Transistor 2SC2712G, Chip
Q702	1	1	1	1	1	HX327121A0	Transistor 2SC2712G, Chip
Q703	1	1	1	1	1	HX327121A0	Transistor 2SC2712G, Chip
Q704	1	1	1	1	1	HX327121A0	Transistor 2SC2712G, Chip
Q705	1	1	1	1	1	HC10039020	IC AN6291
Q706	1	1	1	1	1	HC10003090	IC NJM4558D
Q707	1	1	1	1	1	HC406600B0	IC 4066
Q708	1	1	1	1	1	HX327121A0	Transistor 2SC2712G, Chip
Q709	1	1	1	1	1	HT309452B0	Transistor 2SC945P, Q
Q901	1	1	1	1	1	HX327121A0	Transistor 2SC2712G, Chip
Q902	1	1	1	1	1	HX327121A0	Transistor 2SC2712G, Chip
Q903	1	1	1	1	1	HX327121A0	Transistor 2SC2712G, Chip
Q904	1	1	1	1	1	HX327121A0	Transistor 2SC2712G, Chip
Q905	1	1	1	1	1	HC10039020	IC AN6291
							P701-MISCELLANEOUS
W901	1	1	1	1	1	YU05100260	Jumper Lead, (5P)
W902	1	1	1	1	1	YU06100260	Jumper Lead, (6P)
							(SD630/SD530)
							P800-POWER SWITCH CIRCUIT BOARD
P800	1	1	1	1	1	WB150T1850	P.W. Board, Power Switch
	1	1	1	1		ZZ150T1850	P.W. Board Assembly
⚠G801	1	1	1	1		DK18103840	Ceramic Cap. 0.01μF
⚠G801					1	DK18103850	Ceramic Cap. 0.01μF
⚠S801	1	1	1	1	1	SP01010650	Push Switch

REF. DESIG.	Q'TY U	N	A	P	F	PART NO.	DESCRIPTION
							(SD630, ONLY)
							PJ01-P/B AMP/MAIN CIRCUIT BOARD
PJ01	1	1	1	1	1	WB150T1810	P.W. Board, P/B Amp/Main
	1					ZZ150T1810	P.W. Board Assembly
		1	1	1		ZZ150T8810	P.W. Board Assembly
							(SD530, ONLY)
PJ01	1	1	1	1		WB150T1810	P.W. Board, P/B Amp/Main
	1					ZZ148T1810	P.W. Board Assembly
		1	1	1		ZZ148T8810	P.W. Board Assembly
							PJ01-CAPACITORS
C601	1	1	1	1	1	DF15332310	Film 3300pF ±5%
C602	1	1	1	1	1	DF15332310	Film 3300pF ±5%
C603	1	1	1	1	1	DF15272310	Film 2700pF ±5%
C604	1	1	1	1	1	DF15272310	Film 2700pF ±5%
C605	1	1	1	1	1	EA10601630	Elect 10μF 16V
C606	1	1	1	1	1	EA10601630	Elect 10μF 16V
C607	1	1	1	1	1	EA10701630	Elect 100μF 16V
C608	1	1	1	1	1	EA10701630	Elect 100μF 16V
C609	1	1	1	1	1	EA10701630	Elect 100μF 16V
C610	1	1	1	1	1	EA10701630	Elect 100μF 16V
C611	1	1	1	1	1	EA10505030	Elect 1μF 50V
C612	1	1	1	1	1	EA10505030	Elect 1μF 50V
C613	1	1	1	1	1	EA22701030	Elect 220μF 10V
C614	1	1	1	1	1	EA22701030	Elect 220μF 10V
C615	1	1	1	1	1	DF15153350	Film 0.015μF 50V
C616	1	1	1	1	1	DF15153350	Film 0.015μF 50V
C617	1	1	1	1	1	DF15153350	Film 0.015μF 50V
C618	1	1	1	1	1	DF15153350	Film 0.015μF 50V
C619	1	1	1	1	1	EA10601630	Elect 10μF 16V
C620	1	1	1	1	1	EA10601630	Elect 10μF 16V
C621	1	1	1	1	1	DF15103350	Film 0.01μF 50V
C622	1	1	1	1	1	DF15103350	Film 0.01μF 50V
C623	1	1	1	1	1	EA47503530	Elect 4.7μF 35V
C624	1	1	1	1	1	EA47503530	Elect 4.7μF 35V
C625	1	1	1	1	1	DF15183350	Film 0.018μF ±5%
C626	1	1	1	1	1	DF15183350	Film 0.018μF ±5%
C627	1	1	1	1	1	EA33405030	Elect 0.33μF 50V
C628	1	1	1	1	1	EA33405030	Elect 0.33μF 50V
C629	1	1	1	1	1	EA33405030	Elect 0.33μF 50V
C630	1	1	1	1	1	EA33405030	Elect 0.33μF 50V
C631	1	1	1	1	1	EA10505030	Elect 1μF 50V
C632	1	1	1	1	1	EA10505030	Eelct 1μF 50V
C633	1	1	1	1	1	EA10505030	Elect 1μF 50V
C634	1	1	1	1	1	EA10505030	Elect 1μF 50V
C635	1	1	1	1	1	EA10601630	Elect 10μF 16V
C636	1	1	1	1	1	EA10601630	Elect 10μF 16V
C637	1	1	1	1	1	EA10601630	Elect 10μF 16V
C638	1	1	1	1	1	EA10601630	Elect 10μF 16V
C639	1	1	1	1	1	EA10601630	Elect 10μF 16V
C640	1	1	1	1	1	EA10601630	Elect 10μF 16V
C641	1	1	1	1	1	DF15182310	Film 1800pF ±5%
C642	1	1	1	1	1	DF15182310	Film 1800pF ±5%
C643	1	1	1	1	1	EA47405030	Elect 0.47μF 50V
C644	1	1	1	1	1	EA47405030	Elect 0.47μF 50V
C645	1	1	1	1	1	DF15154350	Film 0.15μF ±5%
C646	1	1	1	1	1	DF15154350	Film 0.15μF ±5%
C647	1	1	1	1	1	EA47503530	Elect 4.7μF 35V
C648	1	1	1	1	1	EA47503530	Elect 4.7μF 35V
C649	1	1	1	1	1	DF15823350	Film 0.082μF ±5%
C650	1	1	1	1	1	DF15823350	Film 0.082μF ±5%

REF. DESIG.	Q'TY U	N	A	P	F	PART NO.	DESCRIPTION
C651	1	1	1	1	1	DF15392310	Film 3900pF ±5%
C652	1	1	1	1	1	DF15392310	Film 3900pF ±5%
C653	1	1	1	1	1	DF15332310	Film 3300pF ±5%
C654	1	1	1	1	1	DF15332310	Film 3300pF ±5%
C655	1	1	1	1	1	DF15102310	Film 1000pF ±5%
C656	1	1	1	1	1	DF15102310	Film 1000pF ±5%
C657	1	1	1	1	1	EA10601630	Elect 10μF 16V
C658	1	1	1	1	1	EA10601630	Elect 10μF 16V
C659	1	1	1	1	1	DF15562310	Film 5600pF ±5%
C660	1	1	1	1	1	DF15562310	Film 5600pF ±5%
C661	1	1	1	1	1	DD15390370	Ceramic 39pF ±5%
C662	1	1	1	1	1	DD15390370	Ceramic 39pF ±5%
C663	1	1	1	1	1	DD15271370	Ceramic 270pF ±5%
C664	1	1	1	1	1	DD15271370	Ceramic 270pF ±5%
C801	1	1	1	1	1	DK16103550	Ceramic 0.01μF ±10%
C802	1	1	1	1	1	DK16103550	Ceramic 0.01μF ±10%
C803	1	1	1	1	1	EA47503530	Elect 4.7μF 35V
⚠C804	1	1	1	1		EB68803520	Elect 6800μF 35V
⚠C804					1	EB68802520	Elect 6800μF 25V
C805	1	1	1	1	1	EA22702530	Elect 220μF 25V
⚠C806	1	1	1	1		EA22803530	Elect 2200μF 35V
⚠C806					1	EA22802530	Elect 2200μF 25V
C807	1	1	1	1	1	EA10701630	Elect 100μF 16V
⚠C808	1	1	1	1		EB68803520	Elect 6800μF 35V
⚠C808					1	EB68802520	Elect 6800μF 25V
C809	1	1	1	1	1	EA10601630	Elect 10μF 16V
CJ01	1	1	1	1	1	DF15681550	Film 680pF ±5%
CJ02	1	1	1	1	1	DF15681550	Film 680pF ±5%
CJ03	1	1	1	1	1	EE10601640	Elect 10μF 16V
CJ04	1	1	1	1	1	EE10601640	Elect 10μF 16V
CJ05	1	1	1	1	1	EA47701630	Elect 470μF 16V
CJ06	1	1	1	1	1	EA47701630	Elect 470μF 16V
CJ07	1	1	1	1	1	DD45101300	Ceramic 100pF ±5%, Chip
CJ08	1	1	1	1	1	DD45101300	Ceramic 100pF ±5%, Chip
CJ09	1	1	1	1	1	DF15273350	Film 0.027μF ±5%
CJ10	1	1	1	1	1	DF15273350	Film 0.027μF ±5%
CJ11	1	1	1	1	1	EA10601630	Elect 10μF 16V
CJ12	1	1	1	1	1	EA10601630	Elect 10μF 16V
CJ13	1	1	1	1	1	DF15333350	Film 0.033μF ±5%
CJ14	1	1	1	1	1	DF15333350	Film 0.033μF ±5%
CJ15	1	1	1	1	1	EA10505030	Elect 1μF 50V
CJ16	1	1	1	1	1	EA10505030	Elect 1μF 50V
CJ17	1	1	1	1	1	EA22505030	Elect 2.2μF 50V
CJ18	1	1	1	1	1	EA22505030	Elect 2.2μF 50V
CJ19	1	1	1	1	1	DD15820560	Ceramic 82pF ±5%
CJ20	1	1	1	1	1	DD15820560	Ceramic 82pF ±5%
CJ21	1	1	1	1	1	DF15561550	Film 560pF ±5%
CJ22	1	1	1	1	1	DF15561550	Film 560pF ±5%
CJ23	1	1	1	1	1	EA47405030	Elect 0.47μF 50V
CJ24	1	1	1	1	1	EA47405030	Elect 0.47μF 50V
CJ25	1	1	1	1	1	DF15392310	Film 3900pF ±5%
CJ26	1	1	1	1	1	DF15392310	Film 3900pF ±5%
CJ27	1	1	1	1	1	DD15221370	Ceramic 220pF ±5%
CJ28	1	1	1	1	1	DD15221370	Ceramic 220pF ±5%
CJ29	1	1	1	1	1	EA10505030	Elect 1μF 50V
CJ30	1	1	1	1	1	EA10505030	Elect 1μF 50V

REF. DESIG.	Q'TY U	N	A	P	F	PART NO.	DESCRIPTION
CJ31	1	1	1	1	1	EQ10601630	Elect 10μF 16V
CJ32	1	1	1	1	1	EQ10601630	Elect 10μF 16V
CJ33	1	1	1	1	1	EA10701630	Elect 100μF 16V
CJ34	1	1	1	1	1	EA10701630	Elect 100μF 16V
CJ35	1	1	1	1	1	EA10601630	Elect 10μF 16V
CJ36	1	1	1	1	1	EA10601630	Elect 10μF 16V
CJ37	1	1	1	1	1	EA47601630	Elect 47μF 16V
CJ38	1	1	1	1	1	EA33601630	Elect 33μF 16V
CJ39	1	1	1	1	1	EA33601630	Elect 33μF 16V
CJ40	1	1	1	1	1	EA33601630	Elect 33μF 16V
CJ41	1	1	1	1	1	DF15154350	Film 0.15μF ±5%
CJ43	1	1	1	1	1	DD15101370	Ceramic 100pF ±5%
CJ44	1	1	1	1	1	DD15101370	Ceramic 100pF ±5%
CJ51	1	1	1	1	1	EA10601630	Elect 10μF 16V
CJ52	1	1	1	1	1	EA10601630	Elect 10μF 16V
CJ53	1	1	1	1	1	DD45101300	Ceramic 100pF ±5%, Chip
CJ54	1	1	1	1	1	DD45101300	Ceramic 100pF ±5%, Chip
CJ55	1	1	1	1	1	EA22505030	Elect 2.2μF 50V
CJ56	1	1	1	1	1	EA22505030	Elect 2.2μF 50V
CJ57	1	1	1	1	1	EA10505030	Elect 1μF 50V
CJ58	1	1	1	1	1	EA10505030	Elect 1μF 50V
CJ59	1	1	1	1	1	DD45101300	Ceramic 100pF ±5%, Chip
CJ60	1	1	1	1	1	DD45101300	Ceramic 100pF ±5%, Chip
CJ61	1	1	1	1	1	EA33601630	Elect 33μF 16V
CJ62	1	1	1	1	1	EA22701630	Elect 220μF 16V
CJ66	1	1	1	1	1	EA47503530	Elect 4.7μF 35V
CJ71	1	1	1	1	1	EA10601630	Elect 10μF 16V
CJ92	1	1	1	1	1	DK46103300	Ceramic 0.01μF ±10%,Chip
CK01	1	1	1	1	1	EA33601630	Elect 33μF 16V
CK02	1	1	1	1	1	EA33601630	Elect 33μF 16V
CK03	1	1	1	1	1	DF15332310	Film 3300pF ±5%
CK04	1	1	1	1	1	DF15332310	Film 3300pF ±5%
CK05	1	1	1	1	1	DF15183350	Film 0.018μF ±5%
CK06	1	1	1	1	1	DF15183350	Film 0.018μF ±5%
CK07	1	1	1	1	1	DF15123350	Film 0.012μF ±5%
CK08	1	1	1	1	1	DF15123350	Film 0.012μF ±5%
CK11	1	1	1	1	1	DF15473350	Film 0.047μF ±5%
CK12	1	1	1	1	1	DF15473350	Film 0.047μF ±5%
CK13	1	1	1	1	1	DF15562350	Film 5600pF ±5%
CK14	1	1	1	1	1	DF15562350	Film 5600pF ±5%
CK15	1	1	1	1	1	DF15333350	Film 0.033μF ±5%
CK16	1	1	1	1	1	DF15333350	Film 0.033μF ±5%
CK51	1	1	1	1	1	EA10701630	Elect 100μF 16V
CK52	1	1	1	1	1	DF15472310	Film 4700pF ±5%
CK53	1	1	1	1	1	DF15273350	Film 0.027μF ±5%
CK54	1	1	1	1	1	DF15153350	Film 0.015μF ±5%
CK55	1	1	1	1	1	DK46102300	Ceramic 1000pF ±10%,Chip
CK56	1	1	1	1	1	DD45101300	Ceramic 100pF ±5%, Chip
CK57	1	1	1	1	1	DF15333350	Film 0.033μF ±5%
CK58	1	1	1	1	1	DF15103350	Film 0.01μF ±5%
CL01	1	1	1	1	1	DF15221550	Film 220pF ±5%
CL02	1	1	1	1	1	DF15221550	Film 220pF ±5%
CL03	1	1	1	1	1	DF15332550	Film 3300pF ±5%
CL04	1	1	1	1	1	EA33601630	Elect 33μF 16V
CL05	1	1	1	1	1	DK46502300	Ceramic 5600pF ±10%,Chip
CL06	1	1	1	1	1	DK46272300	Ceramic 2700pF ±10%,Chip
CL07	1	1	1	1	1	EA33601630	Elect 33μF 16V
CL08	1	1	1	1	1	EA10601630	Elect 10μF 16V

REF. DESIG.	Q'TY U	N	A	P	F	PART NO.	DESCRIPTION
CU01	1	1	1	1	1	DF15471550	Film 470pF ±5%
CU02	1	1	1	1	1	DF15101550	Film 100pF ±5%
CU03	1	1	1	1	1	DK46473200	Ceramic 0.047μF ±10%,Chip
CU04	1	1	1	1	1	DK46473200	Ceramic 0.047μF ±10%,Chip
CU05	1	1	1	1	1	DK46473200	Ceramic 0.047μF ±10%,Chip
CU06	1	1	1	1	1	EA22601630	Elect 22μF 16V
CU07	1	1	1	1	1	DK18102300	Ceramic 1000pF
CU08	1	1	1	1	1	DK18103320	Ceramic 0.01μF
CU61	1	1	1	1	1	EA47503530	Elect 4.7μF 35V
CU62	1	1	1	1	1	EA10702530	Elect 100μF 25V
CU63	1	1	1	1	1	EA10701630	Elect 100μF 16V
CU64	1	1	1	1	1	EA10601630	Elect 10μF 16V
CU73	1	1	1	1		DD11100300	Ceramic 10pF (SD530)
CU74	1	1	1	1		DD11100300	Ceramic 10pF (SD530)
							PJ01-RESISTORS (All Resistors are ±5% & 1/8W)
R601	1	1	1	1	1	GD05222140	2.2KΩ ¼W
R602	1	1	1	1	1	RI05222180	2.2KΩ, Chip
R603	1	1	1	1	1	GD05123140	12KΩ
R604	1	1	1	1	1	GD05123140	12KΩ
R605	1	1	1	1	1	GD05123140	12KΩ
R606	1	1	1	1	1	GD05123140	12KΩ
R607	1	1	1	1	1	RI05472180	4.7KΩ, Chip
R608	1	1	1	1	1	RI05472180	4.7KΩ, Chip
R609	1	1	1	1	1	RA02030800	20KΩ(B), Trimming
R610	1	1	1	1	1	RA02030800	20KΩ(B), Trimming
R611	1	1	1	1	1	RI05563180	56KΩ, Chip
R612	1	1	1	1	1	RI05563180	56KΩ, Chip
R613	1	1	1	1	1	RI05153180	15KΩ, Chip
R614	1	1	1	1	1	RI05153180	15KΩ, Chip
R615	1	1	1	1	1	RI05472180	4.7KΩ, Chip
R616	1	1	1	1	1	RI05472180	4.7KΩ, Chip
R617	1	1	1	1	1	GD05101140	100Ω ¼W
R618	1	1	1	1	1	GD05101140	100Ω ¼W
R619	1	1	1	1	1	GD05473140	47KΩ ¼W
R620	1	1	1	1	1	GD05473140	47KΩ ¼W
R621	1	1	1	1	1	RI05562180	5.6KΩ, Chip
R622	1	1	1	1	1	RI05562180	5.6KΩ, Chip
R623	1	1	1	1	1	RI05823180	82KΩ, Chip
R624	1	1	1	1	1	RI05823180	82KΩ, Chip
R625	1	1	1	1	1	RI05105180	1MΩ, Chip
R626	1	1	1	1	1	RI05105180	1MΩ, Chip
R627	1	1	1	1	1	RI05473180	47KΩ, Chip
R628	1	1	1	1	1	RI05473180	47KΩ, Chip
R629	1	1	1	1	1	RA01040800	100KΩ(B), Trimming
R630	1	1	1	1	1	RA01040800	100KΩ(B), Trimming
R631	1	1	1	1	1	RI05333180	33KΩ, Chip
R632	1	1	1	1	1	RI05333180	33KΩ, Chip
R633	1	1	1	1	1	RI05103180	10KΩ, Chip
R634	1	1	1	1	1	RI05103180	10KΩ, Chip
R635	1	1	1	1	1	RI05562180	5.6KΩ, Chip
R636	1	1	1	1	1	RI05562180	5.6KΩ, Chip
R637	1	1	1	1	1	RI05822180	8.2KΩ, Chip
R638	1	1	1	1	1	RI05822180	8.2KΩ, Chip
R639	1	1	1	1	1	RI05332180	3.3KΩ, Chip
R640	1	1	1	1	1	RI05332180	3.3KΩ, Chip

REF. DESIG.	Q'TY U	N	A	P	F	PART NO.	DESCRIPTION
R641	1	1	1	1	1	RI05102180	1KΩ, Chip
R642	1	1	1	1	1	RI05102180	1KΩ, Chip
R643	1	1	1	1	1	RI05823180	82KΩ, Chip
R644	1	1	1	1	1	RI05823180	82KΩ, Chip
R645	1	1	1	1	1	GD05622140	6.2KΩ ¼W
R646	1	1	1	1	1	GD05622140	6.2KΩ ¼W
R647	1	1	1	1	1	RI05221180	220Ω, Chip
R648	1	1	1	1	1	RI05221180	220Ω, Chip
R649	1	1	1	1	1	GD05241140	240Ω ¼W
R650	1	1	1	1	1	GD05241140	240Ω ¼W
R651	1	1	1	1	1	GD05563140	56KΩ ¼W
R652	1	1	1	1	1	GD05563140	56KΩ ¼W
R653	1	1	1	1	1	RI05472180	4.7KΩ, Chip
R654	1	1	1	1	1	RI05472180	4.7KΩ, Chip
R655	1	1	1	1	1	GD05103140	10KΩ ¼W
R656	1	1	1	1	1	GD05103140	10KΩ ¼W
R657	1	1	1	1	1	GD05683140	68KΩ ¼W
R658	1	1	1	1	1	GD05683140	68KΩ ¼W
R659	1	1	1	1	1	RI05822180	8.2KΩ, Chip
R660	1	1	1	1	1	RI05822180	8.2KΩ, Chip
R669	1	1	1	1	1	RI05103180	10KΩ, Chip
R670	1	1	1	1	1	GD05103140	10KΩ ¼W
R671	1	1	1	1	1	RI05105180	1MΩ, Chip
R672	1	1	1	1	1	RI05105180	1MΩ, Chip
R673	1	1	1	1	1	RI05105180	1MΩ, Chip
R674	1	1	1	1	1	RI05105180	1MΩ, Chip
R801	1	1	1	1	1	GD05392140	3.9KΩ ¼W
⚠R802	1	1	1	1	1	RF05022120	2.2Ω ½W, Fuse
R803	1	1	1	1	1	GD05561120	560Ω ½W
⚠R804	1	1	1	1	1	RF05022120	2.2Ω ½W, Fuse
R805	1	1	1	1	1	GG05471120	470Ω ½W
⚠R806	1	1	1	1	1	RF05022120	2.2Ω ½W, Fuse
R807	1	1	1	1	1	GG05561120	560Ω ½W
RJ00	41	41	41	41	41	RI05000180	0Ω, Chip
RJ01	1	1	1	1	1	RI05100180	10Ω, Chip
RJ02	1	1	1	1	1	RI05100180	10Ω, Chip
RJ03	1	1	1	1	1	GD05154140	150KΩ ¼W
RJ04	1	1	1	1	1	RI05154180	150KΩ, Chip
RJ05	1	1	1	1	1	RI05560180	56Ω, Chip
RJ06	1	1	1	1	1	RI05560180	56Ω, Chip
RJ07	1	1	1	1	1	RI05562180	5.6KΩ, Chip
RJ08	1	1	1	1	1	RI05562180	5.6KΩ, Chip
RJ09	1	1	1	1	1	GD05154140	150KΩ ¼W
RJ10	1	1	1	1	1	GD05154140	150KΩ ¼W
RJ11	1	1	1	1	1	GD05182140	1.8KΩ ¼W
RJ12	1	1	1	1	1	GD05182140	1.8KΩ ¼W
RJ13	1	1	1	1	1	RI05182180	1.8KΩ, Chip
RJ14	1	1	1	1	1	RI05182180	1.8KΩ, Chip
RJ15	1	1	1	1	1	GD05682140	6.8KΩ ¼W
RJ16	1	1	1	1	1	RI05682180	6.8KΩ, Chip
RJ17	1	1	1	1	1	RI05152180	1.5KΩ, Chip
RJ18	1	1	1	1	1	RI05152180	1.5KΩ, Chip
RJ19	1	1	1	1	1	GD05473140	47KΩ ¼W
RJ20	1	1	1	1	1	GD05473140	47KΩ ¼W
RJ21	1	1	1	1	1	RI05183180	18KΩ, Chip
RJ22	1	1	1	1	1	RI05183180	18KΩ, Chip
RJ23	1	1	1	1	1	RI05273180	27KΩ, Chip
RJ24	1	1	1	1	1	RI05273180	27KΩ, Chip
RJ25	1	1	1	1	1	RI05103180	10KΩ, Chip

REF. DESIG.	Q'TY U	N	A	P	F	PART NO.	DESCRIPTION
RJ26	1	1	1	1	1	RI05103180	10KΩ, Chip
RJ27	1	1	1	1	1	GD05332140	3.3KΩ ¼W
RJ28	1	1	1	1	1	GD05332140	3.3KΩ ¼W
RJ29	1					GD05151140	150Ω ¼W
RJ29		1	1	1	1	GD05101140	100Ω ¼W
RJ30	1					GD05151140	150Ω ¼W
RJ30		1	1	1	1	GD05101140	100Ω ¼W
RJ31	1	1	1	1	1	RI05822180	8.2KΩ, Chip
RJ32	1	1	1	1	1	RI05822180	8.2KΩ, Chip
RJ33	1	1	1	1	1	RI05102180	1KΩ, Chip
RJ34	1	1	1	1	1	RI05102180	1KΩ, Chip
RJ35	1	1	1	1	1	RI05683180	68KΩ, Chip
RJ36	1	1	1	1	1	RI05683180	68KΩ, Chip
RJ37	1	1	1	1	1	RI05224180	220KΩ, Chip
RJ38	1	1	1	1	1	RI05273180	27KΩ, Chip
RJ39	1	1	1	1	1	GD05103140	10KΩ ¼W
RJ40	1	1	1	1	1	GD05123140	12KΩ ¼W
RJ41	1	1	1	1	1	RI05272180	2.7KΩ, Chip
RJ42	1	1	1	1	1	RI05472180	4.7KΩ, Chip
RJ43	1	1	1	1	1	RI05822180	8.2KΩ, Chip
RJ44	1	1	1	1	1	GD05562140	4.6KΩ ¼W
RJ45	1	1	1	1	1	RI05563180	56KΩ, Chip (SD630)
RJ47	1	1	1	1	1	RI05272180	2.7KΩ, Chip (SD630)
RJ48	1	1	1	1	1	RI05272180	2.7KΩ, Chip (SD630)
RJ49	1	1	1	1	1	GD05103140	10KΩ ¼W
RJ50	1	1	1	1	1	GD05103140	10KΩ ¼W
RJ51	1	1	1	1	1	RI05473180	22KΩ, Chip
RJ52	1	1	1	1	1	RI05473180	22KΩ, Chip
RJ53	1	1	1	1	1	RI05472180	4.7KΩ, Chip
RJ54	1	1	1	1	1	RI05472180	4.7KΩ, Chip
RJ55	1	1	1	1	1	RI05125180	1.2MΩ, Chip
RJ56	1	1	1	1	1	RI05125180	1.2MΩ, Chip
RJ57	1	1	1	1	1	RI05562180	5.6KΩ, Chip
RJ58	1	1	1	1	1	RI05562180	5.6KΩ, Chip
RJ59	1	1	1	1	1	RI05563180	56KΩ, Chip
RJ60	1	1	1	1	1	RI05563180	56KΩ, Chip
RJ61	1	1	1	1	1	GD05153140	15KΩ ¼W
RJ62	1	1	1	1	1	GD05153140	15KΩ ¼W
RJ65	1	1	1	1	1	RI05154180	150KΩ, Chip
RJ66	1	1	1	1	1	RI05154180	150KΩ, Chip
RJ68	1	1	1	1	1	RI051502180	1KΩ, Chip
RJ71	1	1	1	1	1	GD05332140	3.3KΩ ¼W
RJ72	1	1	1	1	1	RI05473180	47KΩ, Chip
RJ73	1	1	1	1	1	RI05562180	5.6KΩ, Chip
RJ74	1	1	1	1	1	GD05822140	8.2KΩ ¼W
RJ75	1	1	1	1	1	RI05682180	6.8KΩ, Chip
RJ76	1	1	1	1	1	RI05682180	6.8KΩ, Chip
RK01	1	1	1	1	1	GD05153140	15KΩ ¼W
RK02	1	1	1	1	1	RI05153180	15KΩ, Chip
RK03	1	1	1	1	1	RI05153140	15KΩ ¼W
RK04	1	1	1	1	1	RI05153140	15KΩ ¼W
RK05	1	1	1	1	1	RI05562180	5.6KΩ, Chip
RK06	1	1	1	1	1	RI05562180	5.6KΩ, Chip
RK07	1	1	1	1	1	RI05103180	10KΩ, Chip
RK08	1	1	1	1	1	RI05103180	10KΩ, Chip
RK09	1	1	1	1	1	RI05181180	180Ω, Chip
RK10	1	1	1	1	1	RI05181180	180Ω, Chip

REF. DESIG.	Q'TY U	N	A	P	F	PART NO.	DESCRIPTION
RK11	1	1	1	1	1	RI05332180	3.3KΩ, Chip
RK12	1	1	1	1	1	RI05332180	3.3KΩ, Chip
RK13	1	1	1	1	1	RI05332180	3.3KΩ, Chip
RK14	1	1	1	1	1	RI05332180	3.3KΩ, Chip
RK15	1	1	1	1	1	GD05153140	15KΩ ¼W
RK16	1	1	1	1	1	RI05153180	15KΩ, Chip
RK17	1	1	1	1	1	GD05473140	47KΩ ¼W
RK18	1	1	1	1	1	GD05473140	47KΩ ¼W
RK51	1	1	1	1	1	RI05104180	100KΩ, Chip
RK52	1	1	1	1	1	GD05104140	100KΩ ¼W
RK53	1	1	1	1	1	RI05183180	18KΩ, Chip (SD630)
RK54	1	1	1	1	1	RI05103180	10KΩ, Chip (SD630)
RK55	1	1	1	1	1	RI05103180	10KΩ, Chip
RK56	1	1	1	1	1	RI05183180	18KΩ, Chip
RK57	1	1	1	1	1	RI05273180	27KΩ, Chip
RK58	1	1	1	1	1	RI05473180	47KΩ, Chip
RK59	1	1	1	1	1	RI05225180	2.2MΩ, Chip
RK60	1	1	1	1	1	RI05562180	5.6KΩ, Chip
RK61	1	1	1	1	1	RI05473180	47KΩ, Chip
RK62	1	1	1	1	1	RI05473180	47KΩ, Chip
RK63	1	1	1	1	1	GD05154140	150KΩ ¼W
RK64	1	1	1	1	1	RI05820180	82Ω, Chip
RK65	1	1	1	1	1	RI05684180	680KΩ, Chip
RK66	1	1	1	1	1	RI05823180	82KΩ, Chip
RK67	1	1	1	1	1	RI05472180	4.7KΩ, Chip
RK68	1	1	1	1	1	RI05561180	560Ω, Chip
RK69	1	1	1	1	1	RI05102180	1KΩ, Chip
RK70	1	1	1	1	1	RI05104180	100KΩ, Chip
RK71	1	1	1	1	1	RI05333180	33KΩ, Chip
RL01	1	1	1	1	1	RA05030290	50KΩ(B), Trimming (L)
RL02	1	1	1	1	1	RA05030290	50KΩ(B), Trimming (R)
RL03	1	1	1	1	1	RI05822180	8.2KΩ, Chip
RL04	1	1	1	1	1	GG05039140	3.9Ω ¼W
RL05	1	1	1	1	1	RI05822180	8.2KΩ, Chip
RL06	1	1	1	1	1	RI05561180	560Ω, Chip
RL07	1	1	1	1	1	RI05682180	6.8KΩ, Chip
RL08	1	1	1	1	1	RI05122180	1.2KΩ, Chip
RL09	1	1	1	1	1	RI05103180	10KΩ, Chip
⚠RL10	1	1	1	1	1	NF02100140	10Ω ¼W, Fuse
RL11	1	1	1	1	1	RI05122180	1.2KΩ, Chip
RL12	1	1	1	1	1	RA05030800	50KΩ(B), Trimming
RL13	1	1	1	1	1	RA05020800	5KΩ(B), Trimming
RL14	1	1	1	1	1	GD05103140	10KΩ ¼W
RL15	1	1	1	1	1	GD05103140	10KΩ ¼W
RL16	1	1	1	1	1	GD05103140	10KΩ ¼W
RU00	37	37	37	37	37	RI05000180	0Ω, Chip
RU01	1	1	1	1	1	GD05564140	560KΩ ¼W
RU02	1	1	1	1	1	GD05102140	1KΩ ¼W
RU03	1	1	1	1	1	RI05223180	22KΩ, Chip
RU04	1	1	1	1	1	RI05473180	47KΩ, Chip
RU05	1	1	1	1	1	RI05473180	47KΩ, Chip
RU06	1	1	1	1	1	RI05473180	47KΩ, Chip
RU07	1	1	1	1	1	RI05473180	47KΩ, Chip
RU08	1	1	1	1	1	RI05473180	47KΩ, Chip
RU09	1	1	1	1	1	RI05473180	47KΩ, Chip

REF. DESIG.	Q'TY U	N	A	P	F	PART NO.	DESCRIPTION
RU10	1	1	1	1	1	RI05473180	47KΩ, Chip
RU11	1	1	1	1	1	GD05473140	47KΩ ¼W
RU16	1	1	1	1	1	RI05473180	47KΩ, Chip
RU17	1	1	1	1	1	RI05473180	47KΩ, Chip
RU18	1	1	1	1	1	RI05473180	47KΩ, Chip
RU19	1	1	1	1	1	RI05183180	18KΩ, Chip
RU20	1	1	1	1	1	RI05183180	18KΩ, Chip
RU21	1	1	1	1	1	RI05183180	18KΩ, Chip
RU22	1	1	1	1	1	GD05221140	220Ω ¼W
RU23	1	1	1	1	1	RI05473180	47KΩ, Chip
RU24	1	1	1	1	1	RI05473180	47KΩ, Chip
RU25	1	1	1	1	1	RI05473180	47KΩ, Chip
RU26	1	1	1	1	1	RI05473180	47KΩ, Chip
RU27	1	1	1	1	1	RI05473180	47KΩ, Chip
RU28	1	1	1	1	1	RI05473180	47KΩ, Chip
RU29	1	1	1	1	1	RI05473180	47KΩ, Chip
RU30	1	1	1	1	1	RA01030800	10KΩ(B), Trimming
RU31	1	1	1	1	1	RI05562180	5.6KΩ, Chip
RU32	1	1	1	1	1	RI05473180	47KΩ, Chip
RU33	1	1	1	1	1	RI05473180	47KΩ, Chip
RU34	1	1	1	1	1	RI05473180	47KΩ, Chip
RU35	1	1	1	1	1	RI05473180	47KΩ, Chip
RU36	1	1	1	1	1	RI05474180	470KΩ, Chip
RU37	1	1	1	1	1	GD05474140	470KΩ ¼W
RU38	1	1	1	1	1	GD05474140	470KΩ ¼W
RU39	1	1	1	1	1	RI05473180	47KΩ, Chip
RU40	1	1	1	1	1	RI05333180	33KΩ, Chip
RU41	1	1	1	1	1	RI05123180	12KΩ, Chip
RU42	1	1	1	1	1	GD05122140	1.2KΩ ¼W
RU43	1	1	1	1	1	RI05562180	5.6KΩ, Chip
RU44	1	1	1	1	1	GA05181010	180Ω 1W
RU45	1	1	1	1	1	GD05121140	120Ω ¼W
RU46	1	1	1	1		RI05473180	47KΩ, Chip
RU47	1	1	1	1		RI05223180	22KΩ, Chip
RU48	1	1	1	1	1	RI05473180	47KΩ, Chip
RU49	1	1	1	1		RI05473180	47KΩ, Chip
RU50	1	1	1	1		RI05473180	47KΩ, Chip
RU51	1	1	1	1	1	RI05152180	1.5KΩ, Chip
RU61	1	1	1	1	1	GD05472140	4.7KΩ ¼W
RU62	1	1	1	1	1	GD05103180	10KΩ ¼W
RU63	1	1	1	1	1	RI05104180	100KΩ, Chip
RU64	1	1	1	1	1	GD05393140	39KΩ ¼W
RU65	1	1	1	1	1	RI05103180	10KΩ, Chip
RU66	1	1	1	1	1	RI05103180	10KΩ, Chip
RU67	1	1	1	1	1	RI05103180	10KΩ, Chip
RU68	1	1	1	1	1	RI05563180	56KΩ, Chip
RU69	1	1	1	1	1	RI05223180	22KΩ, Chip
RU70	1	1	1	1	1	RI05223180	22KΩ, Chip
RU75	1	1	1	1		GD05473140	47KΩ ¼W
RU76	1	1	1	1	1	RI05333180	33KΩ, Chip
RU77	1	1	1	1	1	RI05123180	12KΩ, Chip
RU78	1	1	1	1	1	GD05473140	47KΩ ¼W
RU79	1	1	1	1	1	GD05681140	680Ω ¼W

REF. DESIG.	Q'TY U	N	A	P	F	PART NO.	DESCRIPTION
RU81	1	1	1	1	1	GD05102140	1KΩ ¼W (SD630)
⚠RU82	1	1	1	1	1	NF02100140	10Ω ¼W,Fuse (SD630)
RU83	1	1	1	1	1	RI05473180	47KΩ, Chip (SD630)
RU84	1	1	1	1	1	RI05473180	47KΩ, Chip (SD630)
RU85	1	1	1	1	1	RI05473180	47KΩ, Chip (SD630)
RU86	1	1	1	1	1	GD05333140	33KΩ ¼W (SD630)
RU87	1	1	1	1	1	RI05103180	10KΩ, Chip (SD630)
RU88	1	1	1	1	1	RI05103180	10KΩ, Chip (SD630)
RU89	1	1	1	1	1	GD05103140	10KΩ ¼W (SD630)
RU90	1	1	1	1	1	GD05103140	10KΩ ¼W (SD630)
RU91	1	1	1	1	1	RI05104180	100KΩ, Chip (SD630)
RU92	1	1	1	1	1	GD05104140	100KΩ ¼W (SD630)
RU93	1	1	1	1	1	GD05104180	100KΩ, Chip (SD630)
RU94	1	1	1	1	1	GD05104140	100KΩ ¼W (SD630)
RU95	1	1	1	1	1	RI05473180	47KΩ, Chip (SD630)
RU96	1	1	1	1	1	RI05473180	47KΩ, Chip (SD630)
RX01	1	1	1	1	1	RA02030800	20KΩ(B), Trimming
RX02	1	1	1	1	1	RA02030800	20KΩ(B), Trimming
							PJ01-SEMICONDUCTORS
⚠D801	1	1	1	1	1	HD20027080	Diode RB-152
⚠D802	1	1	1	1	1	HD20020080	Diode MI151R
D803	1	1	1	1	1	HZ20003020	Diode MA151K, Chip
D804	1	1	1	1	1	HD30012020	Zener MA1160
D805	1	1	1	1	1	HD20015030	Diode DS135D
⚠D806	1	1	1	1	1	HD20015030	Diode DS135D
D807	1	1	1	1	1	HZ20003020	Diode MA151K, Chip
D808	1	1	1	1	1	HD30022020	Zener MA1130
D809	1	1	1	1	1	HZ20003020	Diode MA151K, Chip
D810	1	1	1	1	1	HD30009020	Zener MA1110
DJ02	1	1	1	1	1	HZ20001020	Diode MA151WK, Chip
DJ71	1	1	1	1	1	HD20001000	Diode 1S1555
DJ72	1	1	1	1	1	HD20001000	Diode MA150
DK51	1	1	1	1	1	HZ20004020	Diode MA151A, Chip
DL01	1	1	1	1	1	HZ20001020	Diode MA151WK, Chip
DU01	1	1	1	1	1	HZ20003020	Diode MA151K, Chip
DU02	1	1	1	1	1	HD30026020	Zener MA1075(H)
DU03	1	1	1	1	1	HD20001000	Diode MA150
DU04	1	1	1	1	1	HD20001000	Diode MA150
DU05	1	1	1	1	1	HD20001000	Diode MA150
DU06	1	1	1	1	1	HD20001000	Diode MA150
DU07	1	1	1	1	1	HZ20002020	Diode MA151WA, Chip
DU08	1	1	1	1	1	HZ20002020	Diode MA151WA, Chip
DU09	1	1	1	1	1	HZ20002020	Diode MA151WA, Chip
⚠DU61	1	1	1	1	1	HD20001000	Diode 1S1555
DU62	1	1	1	1	1	HD20001000	Diode MA150
DU63	1	1	1	1	1	HZ20004020	Diode MA151A, Chip
DU64	1	1	1	1	1	HD30026020	Zener MA1075(H)
DU65	1	1	1	1	1	HD20001000	Diode MA150
DU66	1	1	1	1	1	HZ20004020	Diode MA151A, Chip
DU67	1	1	1	1	1	HD30006020	Zener MA1062
DU69	1	1	1	1	1	HD20001000	Diode MA150
DU71	1	1	1	1	1	HD20001000	Diode MA150
DU72	1	1	1	1	1	HZ20004020	Diode MA151A, Chip
DU73	1	1	1	1	1	HZ20004020	Diode MA151A, Chip

REF. DESIG.	Q'TY U	N	A	P	F	PART NO.	DESCRIPTION
DU81	1	1	1	1	1	HZ20001022	Dioed MA151WK, Chip (SD630)
DU82	1	1	1	1	1	HD20001000	Diode MA150 (SD630)
DU83	1	1	1	1	1	HD20001000	Diode MA150 (SD630)
Q601	1	1	1	1	1	HC10054010	IC HA12038NT(L)
Q602	1	1	1	1	1	HC10054010	IC HA12038NT(R)
Q603	1	1	1	1	1	HX327121A0	Transistor 2SC2712G, Chip
Q604	1	1	1	1	1	HX327121A0	Transistor 2SC2712G, Chip
Q605	1	1	1	1	1	HX327121A0	Transistor 2SC2712G, Chip
Q606	1	1	1	1	1	HX327121A0	Transistor 2SC2712G, Chip
⚠Q801	1	1	1	1	1	HT403131E0	Transistor 2SD313E
⚠Q802	1	1	1	1	1	HT403131E0	Transistor 2SD313E
⚠Q803	1	1	1	1	1	HT403131E0	Transistor 2SD313E
QJ01	1	1	1	1	1	HX406011F0	Transistor 2SD610H(S), Chip
QJ02	1	1	1	1	1	HX406011F0	Transistor 2SD610H(S), Chip
QJ03	1	1	1	1	1	HC10053010	IC HA12051
QJ04	1	1	1	1	1	HC10003090	IC NJM4558D
QJ05	1	1	1	1	1	HX327121A0	Transistor 2SC2712G, Chip
QJ06	1	1	1	1	1	HX327121A0	Transistor 2SC2712G, Chip (SD630)
QJ51	1	1	1	1	1	HX410310S0	Transistor 2SD1030S, Chip
QJ52	1	1	1	1	1	HX410310S0	Transistor 2SD1030S, Chip
QJ53	1	1	1	1	1	HC10003090	IC NJM4558D
QJ71	1	1	1	1	1	HX327121A0	Transistor 2SC2712G, Chip
QJ72	1	1	1	1	1	HX327121A0	Transistor 2SC2712G, Chip
QJ73	1	1	1	1	1	HX327121A0	Transistor 2SC2712G, Chip
QJ74	1	1	1	1	1	HX327121A0	Transistor 2SC2712G, Chip
QK01	1	1	1	1	1	HX327121A0	Transistor 2SC2712G, Chip
QK02	1	1	1	1	1	HX327121A0	Transistor 2SC2712G, Chip
QK03	1	1	1	1	1	HX327121A0	Transistor 2SC2712G, Chip
QK04	1	1	1	1	1	HX327121A0	Transistor 2SC2712G, Chip
QK05	1	1	1	1	1	HX327121A0	Transistor 2SC2712G, Chip
QK06	1	1	1	1	1	HX327121A0	Transistor 2SC2712G, Chip
QK51	1	1	1	1	1	HX327121A0	Transistor 2SC2712G, Chip (SD630)
QK52	1	1	1	1	1	HX327121A0	Transistor 2SC2712G, Chip
QK53	1	1	1	1	1	HX327121A0	Transistor 2SC2712G, Chip
QK54	1	1	1	1	1	HX327121A0	Transistor 2SC2712G, Chip
QK55	1	1	1	1	1	HX111621A0	Transistor 2SA1162G, Chip
QK56	1	1	1	1	1	HX327121A0	Transistor 2SC2712G, Chip
QK56	1	1	1	1	1	HX327121A0	Transistor 2SC2712G, Chip
QK58	1	1	1	1	1	HX327121A0	Transistor 2SC2712G, Chip
QL01	1	1	1	1	1	HT404711K0	Transistor 2SD471(K)
QL02	1	1	1	1	1	HT313831R0	Transistor 2SC1383R
QL03	1	1	1	1	1	HT309452B0	Transistor 2SC945P, Q

REF. DESIG.	Q'TY U	N	A	P	F	PART NO.	DESCRIPTION
QU01	1	1	1	1	1	HC10073060	IC μPD546C
QU02	1	1	1	1	1	HC10074060	IC μPD554C
QU03	1	1	1	1	1	HX327121A0	Transistor 2SC2712G, Chip
QU04	1	1	1	1	1	HX327121A0	Transistor 2SC2712G, Chip
QU05	1	1	1	1	1	HX327121A0	Transistor 2SC2712G, Chip
QU06	1	1	1	1	1	HX327121A0	Transistor 2SC2712G, Chip
QU07	1	1	1	1	1	HX32532000	Transistor 2SC2532, Chip
QU08	1	1	1	1	1	HX32532000	Transistor 2SC2532, Chip
QU09	1	1	1	1	1	HX32532000	Transistor 2SC2532, Chip
QU10	1	1	1	1	1	HX111621A0	Transistor 2SA1162G, Chip
QU11	1	1	1	1	1	HX327121A0	Transistor 2SC2712G, Chip
QU12	1	1	1	1	1	HC10025210	IC BA6109
QU14	1	1	1	1	1	HY202081B0	Transistor 2SK208(O), Chip
QU15	1	1	1	1	1	HY202081B0	Transistor 2SK208(O), Chip
QU16	1	1	1	1	1	HY202081B0	Transistor 2SK208(O), Chip
QU17	1	1	1	1	1	HX327121A0	Transistor 2SC2712G, Chip
QU18	1	1	1	1	1	HT313831R0	Transistor 2SC1383R
QU19	1	1	1	1		HX327121A0	Transistor 2SC2712G, Chip
QU20	1	1	1	1		HX327121A0	Transistor 2SC2712G, Chip
QU21	1	1	1	1	1	HT403131E0	Transistor 2SD313E
QU61	1	1	1	1	1	HX327121A0	Transistor 2SC2712G, Chip
QU62	1	1	1	1	1	HX327121A0	Transistor 2SC2712G, Chip
QU63	1	1	1	1	1	HX111621A0	Transistor 2SA1162G, Chip
QU64	1	1	1	1	1	HX327121A0	Transistor 2SC2712G, Chip
QU65	1	1	1	1	1	HX327121A0	Transistor 2SC2712G, Chip
QU66	1	1	1	1	1	HX111621A0	Transistor 2SA1162G, Chip
QU67	1	1	1	1	1	HX327121A0	Transistor 2SC2712G, Chip
QU81	1	1	1	1	1	HC406600B0	IC 4066 (SD630)
QU82	1	1	1	1	1	HC406600B0	IC 4066 (SD630)
QU83	1	1	1	1	1	HC400100B0	IC 4001 (SD630)
QU85	1	1	1	1	1	HX327121A0	Transistor 2SC2712G, Chip (SD630)
QU86	1	1	1	1	1	HX327121A0	Transistor 2SC2712G, Chip (SD630)
							PJ01-MISCELLANEOUS
⚠FJ01	1	1	1	1	1	FU40115010	Protector, 0.4A 0.2Ω
⚠FU01	1	1	1	1	1	FU40115010	Protector, 0.4A 0.2Ω
J901	1	1	1	1	1	YJ06002450	Jack, (5P) (SD630)
J902	1	1	1	1	1	YJ06002390	Jack, (6P) (SD630)
JJ01	1	1	1	1	1	YJ01001980	Jack, Mic (L)
JJ02	1	1	1	1	1	YJ01001980	Jack, Mic (R)
JJ03	1	1	1	1	1	YJ01001790	Jack, Headphone
JJ51	1	1	1	1	1	YJ06002390	Jack, (5P)
JJ52	1	1	1	1	1	YJ06002390	Jack, (5P)
JJ71	1	1	1	1	1	YP06002420	Plug, (6P)
JL72	1	1	1	1	1	YP06002360	Plug, (3P)
JU01	1	1	1	1	1	YP06002450	Plug, (10P)
JU02	1	1	1	1	1	YP06002450	Plug, (10P)
JU03	1	1	1	1	1	YP06002380	Plug, (7P)
JU04	1	1	1	1	1	YP06002370	Plug, (2P)
JU05	1	1	1	1		YU06002440	Plug, (4P)
JU06	1	1	1	1	1	YP06002400	Plug, (4P)
JX01	1	1	1	1	1	YJ06002440	Jack, (4P)

REF. DESIG.	Q'TY U	N	A	P	F	PART NO.	DESCRIPTION
L601	1	1	1	1	1	LS10440050	M.P.X. Coil
L602	1	1	1	1	1	LS10440050	M.P.X. Coil
L603	1	1	1	1	1	LC23660700	Choke Coil, 36mH
L604	1	1	1	1	1	LC23660700	Choke Coil, 36mH
LJ01	1	1	1	1	1	LC22260700	Choke Coil, 22mH
LJ02	1	1	1	1	1	LC22260700	Choke Coil, 22mH
LJ03	1	1	1	1	1	LC22260700	Choke Coil, 22mH
LJ04	1	1	1	1	1	LC22260700	Choke Coil, 22mH
LJ71	1	1	1	1	1	LY20120300	Relay
LK01	1	1	1	1	1	LC25650700	Choke Coil, 5.6mH
LK02	1	1	1	1	1	LC25650700	Choke Coil, 5.6mH
LL01	1	1	1	1	1	TC10140250	O.S.C. Transformer
LL02	1	1	1	1	1	LC22250600	Choke Coil, 2.2mH
							(SD630/SD530) PU01-TIMER SWITCH CIRCUIT BOARD
PU01	1	1	1	1	1	YB150T1860	P.W. Board, Timer Switch
	1	1	1	1		ZZ150T1860	P.W. Board Assembly
SU02	1	1	1	1	1	SS02030190	Slide Switch
WU01	1	1	1	1	1	YU03240260	Jumper Lead
							(SD630/SD530) PW01-INPUT/OUTPUT JACK CIRCUIT BOARD
PW01	1	1	1	1	1	WB150T1870	P.W. Board, Input/Output Jack
	1	1	1	1		ZZ150T1870	P.W. Board Assembly
JJ04	1					YT02040480	Terminal, (4P)
		1	1	1	1	YT02040470	Terminal, (4P)
WJ02	1	1	1	1	1	YU05200260	Jumper Lead, (5P)
							(SD630/SD530) PW02-REMOTE/EQ JACK CIRCUIT BOARD
PW02	1	1	1	1		WB150T1880	P.W. Board, Remote/EQ Jack
	1	1	1	1		ZZ150T1880	P.W. Board Assembly
JJ05	1	1	1	1		YT02020390	Terminal, (2P)
JJ06	1	1	1	1		YT02020400	Terminal, (2P)
SU01	1	1	1	1		SS02020700	Slide Switch
WU02	1	1	1	1		YU04120260	Jumper Lead, (4P)
							(SD630/SD530) PX01-L.E.D. METER CIRCUIT BOARD
PX01	1	1	1	1	1	HI10801320	P.W. Board, L.E.D. Meter
CX91	1	1	1	1	1	EA47503530	Elect Cap. 4.7μF 35V
CX92	1	1	1	1	1	EA47503530	Elect Cap. 4.7μF 35V
CX93	1	1	1	1	1	EA10505030	Elect Cap. 1μF 50V
CX94	1	1	1	1	1	EA10505030	Elect Cap. 1μF 50V
CX95	1	1	1	1	1	EA10601630	Elect Cap. 10μF 16V
RX91	1	1	1	1	1	GD05472140	Resistor 4.7KΩ ±5% ¼W
RX92	1	1	1	1	1	GD05472140	Resistor 4.7KΩ ±5% ¼W
RX93	1	1	1	1	1	GD05621140	Resistor 620Ω ±5% ¼W

REF. DESIG.	Q'TY U	N	A	P	F	PART NO.	DESCRIPTION
							(SD630, ONLY)
							PY01-KEY SWITCH/REC VOLUME CIRCUIT BOARD
PY01	1	1	1	1	1	WB150T1820	P.W. Board, Key Switch/Rec Volume
	1	1	1	1		ZZ150T1820	P.W. Board Assembly
							(SD530, ONLY)
PY01	1	1	1	1		WB150T1820	P.W. Board, Key Switch/Rec Volume
	1	1	1	1		ZZ148T1820	P.W. Board Assembly
							PY01-RESISTORS
							(All Resistors are ±5% & 1/8W)
RJ67	1	1	1	1	1	ND02503020	50K (A) x 2, Variable
RY00	14	14	14	14	14	RI05000180	0Ω, Chip
RY01	1	1	1	1	1	RI05182180	1.8KΩ, Chip
RY02	1	1	1	1	1	RI05182180	1.8KΩ, Chip
RY03	1	1	1	1	1	RI05182180	1.8KΩ, Chip
RY04	1	1	1	1	1	RI05182180	1.8KΩ, Chip
RY05	1	1	1	1	1	RI05182180	1.8KΩ, Chip
RY06	1	1	1	1	1	RI05182180	1.8KΩ, Chip
RY07	1	1	1	1	1	RI05272180	2.7KΩ, Chip
RY08	1	1	1	1	1	RI05391180	390Ω, Chip
RY09	1	1	1	1	1	RI05471180	470Ω, Chip
RY10	1	1	1	1	1	RI05122180	1.2KΩ, Chip
RY11	1	1	1	1	1	RI05391180	390Ω, Chip
RY12	1	1	1	1	1	RI05471180	470Ω, Chip
RY13	1	1	1	1	1	RI05391180	390Ω, Chip (SD630)
RY14	1	1	1	1	1	RI05471180	470Ω, Chip (SD630)
RY15	1	1	1	1	1	RI05391180	390Ω, Chip (SD630)
RY16	1	1	1	1	1	RI05471180	470Ω, Chip (SD630)
RY17	1	1	1	1	1	GD05221140	220Ω ¼W
RY18	1	1	1	1	1	GD05221140	220Ω ¼W
RY19	1	1	1	1	1	GD05221140	220Ω ¼W
RY20	1	1	1	1	1	GD05221140	220Ω ¼W
RY21	1	1	1	1	1	GD05221140	220Ω ¼W
RY22	1	1	1	1	1	GD05221140	220Ω ¼W
							PY01-SEMICONDUCTORS
DY01	1	1	1	1	1	HI10025320	L.E.D. GL-9NG26(GRN)
DY02	1	1	1	1	1	HI10025320	L.E.D. GL-9NG26(GRN)
DY03	1	1	1	1	1	HI10025320	L.E.D. GL-9NG26(GRN)
DY04	1	1	1	1	1	HI10025320	L.E.D. GL-9NG26(GRN)
DY05	1	1	1	1	1	HI10025320	L.E.D. GL-9NG26(GRN)
DY06	1	1	1	1	1	HI10025320	L.E.D. GL-9NG26(GRN) (SD630)
DY07	1	1	1	1	1	HI10025320	L.E.D. GL-9NG26(GRN) (SD630)
DY08	1	1	1	1	1	HI10022320	L.E.D. GN-5NG10(GRN)
DY09	1	1	1	1	1	HI10024320	L.E.D. GL-5HY10(ORG)
DY10	1	1	1	1	1	HI10022320	L.E.D. GN-5NG10(GRN)
DY11	1	1	1	1	1	HI10023320	L.E.D. GL-5HD10(RED)
DY12	1	1	1	1	1	HI10022320	L.E.D. GL-5NG10(GRN)
DY13	1	1	1	1	1	HI10022320	L.E.D. GL-5NG10(GRN)
DY14	1	1	1	1	1	HI10022320	L.E.D. GL-5NG10(GRN)
DY15	1	1	1	1	1	HI10022320	L.E.D. GL-5NG10(GRN)
DY16	1	1	1	1	1	HD20001001	Diode 1S1555
QY01	1	1	1	1	1	HT326342B0	Transistor 2SC2634(R or S)

REF. DESIG.	Q'TY U	N	A	P	F	PART NO.	DESCRIPTION
							PY01-MISCELLANEOUS
SY01	1	1	1	1	1	SP02030270	Push Switch, Tape Selector
SY02	1	1	1	1	1	SP02050100	Push Switch, NR Selector (SD630)
SY02	1	1	1	1	1	SP02030100	Push Switch, NR Selector (SD530)
SY03	1	1	1	1	1	SP01010570	Push Switch, Memory
SY04	1	1	1	1	1	SP01010570	Push Swtich, Index Scan
SY05	1	1	1	1	1	SP01010570	Push Swtich, QMS Skip
SY06	1	1	1	1	1	SP01010570	Push Switch, STOP
SY07	1	1	1	1	1	SP01010570	Push Switch, REW
SY08	1	1	1	1	1	SP01010570	Push Switch, FF
SY09	1	1	1	1	1	SP01010570	Push Switch, PAUSE
SY10	1	1	1	1	1	SP01010570	Push Switch, PLAY/REPEAT
SY11	1	1	1	1	1	SP01010570	Push Switch, REC
SY12	1	1	1	1	1	SP01010570	Push Switch, REC-MUTE
SY13	1	1	1	1	1	SP01010570	Push Switch, Dilection
SY14	1	1	1	1	1	SP01010570	Push Switch, REV MODE
WJ01	1	1	1	1	1	YU05120260	Jumper Lead, (5P)
WY01	1	1	1	1	1		Jumper Lead, (3P)
WY02	1	1	1	1	1		Jumper Lead, (6P)
WY03	1	1	1	1	1	YU05360260	Jumper Lead, (5P)
WY04	1	1	1	1	1	YU04340260	Jumper Lead, (4P)
WY05	1	1	1	1	1	YU06300260	Jumper Lead, (6P)
							(SD630/SD530)
							PY02-FWD L.E.D. CIRCUIT BOARD
PY02	1	1	1	1	1	WB150T1830	P.W. Board, FWD L.E.D.
	1	1	1	1		ZZ150T1830	P.W. Board Assembly
DY17	1	1	1	1	1	HI10035030	L.E.D. SLF-202B(GRN)
							(SD630/SD530)
							PY03-REVERSE L.ED. CIRCUIT BOARD
PY03	1	1	1	1	1	WB150T1840	P.W. Board, Reverse L.E.D.
	1	1	1	1		ZZ150T1840	P.W. Board, Assembly
DY18	1	1	1	1	1	HI10035030	L.E.D. SLF-202B(GRN)

REF. DESIG.	Q'TY U	N	A	P	F	PART NO.	DESCRIPTION
							P811-ASSIST CIRCUIT BOARD
P811	1	1	1	1	1	YK150T0410	P.W. Board, Assist
	1	1	1	1		ZZ150T0410	P.W. Board Assembly
							P811-CAPACITORS
CU11	1	1	1	1	1	DK18103310	Ceramic 0.01μF
CU65	1	1	1	1	1	EA22601630	Elect 22μF 16V
CU67	1	1	1	1	1	EA47601030	Elect 47μF 10V
C811	1	1	1	1	1	EA33801630	Elect 3300μF 16V
							P811-RESISTORS
RU12	1	1	1	1	1	GD05154140	150KΩ ±5% ¼W
RU13	1	1	1	1	1	GD05333140	33KΩ ±5% ¼W
RU52	1	1	1	1	1	GD05154140	150KΩ ±5% ¼W
RU53	1	1	1	1	1	GD05103140	10KΩ ±5% ¼W
RU97	1	1	1	1	1	GD05154140	150KΩ ±5% ¼W
							P811-SEMICONDUCTORS
DU84	1	1	1	1	1	HD20001000	Diode MA150
DU85	1	1	1	1	1	HD20001000	Diode MA150
DU86	1	1	1	1	1	HD20001000	Diode MA150
DU87	1	1	1	1	1	HD20001000	Diode MA150
QU13	1	1	1	1	1	HC10025210	IC BA6109
QU88	1	1	1	1	1	TH826342B0	Transistor 2SC2634(R, S)
QU89	1	1	1	1	1	HT309452A0	Transistor 2SC945(Q, R)
Q811	1	1	1	1	1	HC38515090	IC NJM78M15A
							P811-MISCELLANEOUS
FU02	1	1	1	1	1	FU40115010	Protector, 0.4A 0.2Ω
JU07	1	1	1	1	1	YJ06002460	Jack, (7P)
WU11	1	1	1	1	1	YU07240260	Jumper Lead, (7P)

(WO1-99)	Assembly and Wiring
(TO1-99)	Adjustment
(XO1-00)	Correction

NOTE ON SAFETY:
SYMBOL ⚠ FIRE OR ELECTRICAL SHOCK HAZARD. ONLY ORIGINAL PARTS SHOULD BE USED TO REPLACE ANY PART MARKED WITH SYMBOL ⚠. ANY OTHER COMPONENT SUBSTITUTION (OTHER THAN ORIGINAL TYPE), MAY INCREASE RISK OF FIRE OR ELECTRICAL SHOCK HAZARD.

MODEL SD530 TECHNICAL SPECIFICATIONS (DIN)

Style	Front load
Tape Drive System	Single Capstan Drive
Cartridge	Philips type compact cassette
Track System	Compatible Stereo 4-track 2-channel
Tape Speed	4.75 cm/sec.
Heads	2 Head System
Composition	Rec/Play: Super Hard Metal Alloy
	Erase: Dual Gap Ferrite
Motor	Reel: DC Motor
	Capstan: DC Servo Motor
	Mechanism: DC Motor

Overall Frequency Response at -20 dB	
Normal Tape	20 Hz ~ 17 kHz
CrO_2 Tape	20 Hz ~ 19 kHz
Metal Tape	20 Hz ~ 20 kHz

Signal-to-Noise Ratio:	
Dolby C (ON)	75 dB
Dolby (OFF)	59 dB

Wow and Flutter	
DIN WTD	0.08%

Outputs	
Line Level/Impedance	600 mV/4 k ohms
Headphone Level/Impedance	50 mV/100 ohms

Input (Level at 0 VU)	
Line Sensitivity/Impedance	70 mV/50 k ohms
Mic Sensitivity/Impedance	0.3 mV/10 k ohms

Fast Rewind Time	80 sec. (C-60)
Fast Forward Time	80 sec. (C-60)

Power Requirements	110/120/220/240 V AC, 50/60 Hz
Power Consumption	30 W
Dimensions	
Panel Width	416 mm
Panel Height	100 mm
Depth	300 mm
Weight	3.7 kg

MODEL SD 630 TECHNICAL SPECIFICATIONS (DIN)

Style	Front load
Tape Drive System	Single Capstan Drive
Cartridge	Philips type compact cassette
Track System	Compatible Stereo 4-track 2-channel
Tape Speed	4.75 cm/sec.
Heads	2 Head System
Composition	Rec/Play: Super Hard Metal Alloy Erase: Dual Gap Ferrite
Motor	Reel: DC Motor Capstan: DC Servo Motor Mechanism: DC Motor

Overall Frequency Response at -20 dB	
Normal Tape	20 Hz ~ 17 kHz
CrO_2 Tape	20 Hz ~ 19 kHz
Metal Tape	20 Hz ~ 20 kHz
Signal-to-Noise Ratio:	
dbx ON	85 dB
Dolby C (ON)	75 dB
Dolby (OFF)	62 dB
Wow and Flutter	
DIN WTD	0.08%
Outputs	
Line Level/Impedance	600 mV/4 k ohms
Headphone Level/Impedance	50 mV/100 ohms
Input (Level at 0 VU)	
Line Sensitivity/Impedance	70 mV/50 k ohms
Mic Sensitivity/Impedance	0,3 mV/10 k ohms
Fast Rewind Time	80 sec. (C-60)
Fast Forward Time	80 sec. (C-60)
Power Requirements	110/120/220/240 V AC, 50/60 Hz
Power Consumption	30 W
Dimensions	
Panel Width	416 mm
Panel Height	100 mm
Depth	300 mm
Weight	4.0 kg

marantz®

Dolby noise reduction manufactured under license from Dolby Laboratories Licensing Corporation.
"Dolby" and the double-D symbol are trademarks of Dolby Laboratories Licensing Corporation.

dbx noise reduction manufactured under license from dbx Inc.
"dbx" is a registered trademark of dbx Inc., Newton, Mass., USA.

MARANTZ is a registered trademark.

150T85501
1983/7